Readout of SiPMs physics principles and insights

3Dπ Meeting - GSSI 18/06/2018

Alessandro Razeto
Laboratori Nazionali del Gran Sasso

DETECTING SINGLE PHOTONS

Photo-multiplier tube

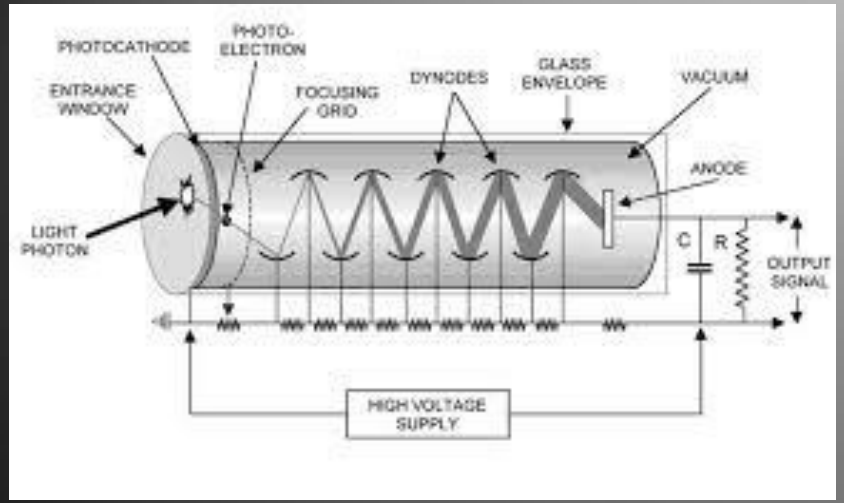

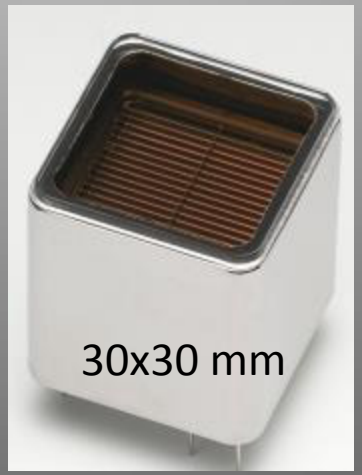

From 1 to 2000 cm^2

PMTs largely used

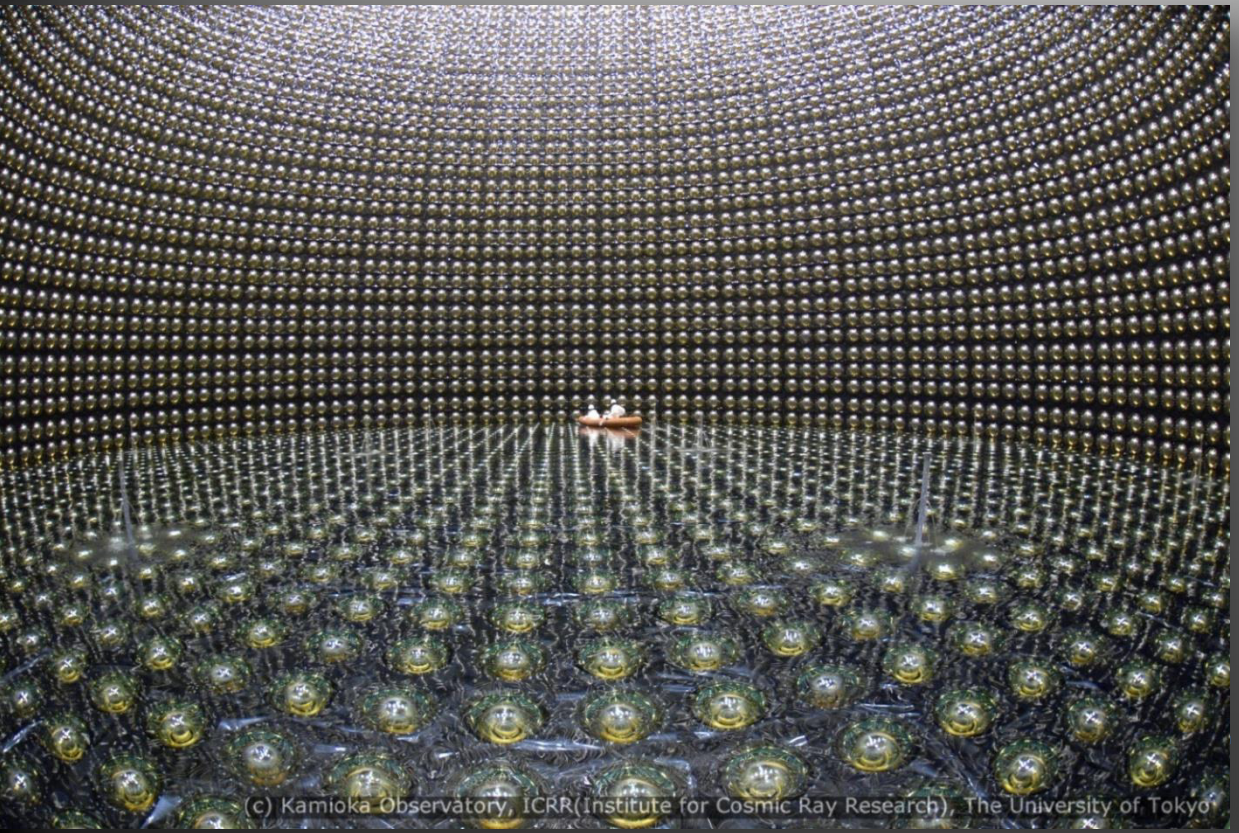

13000 PMTs
ϕ = 50 cm

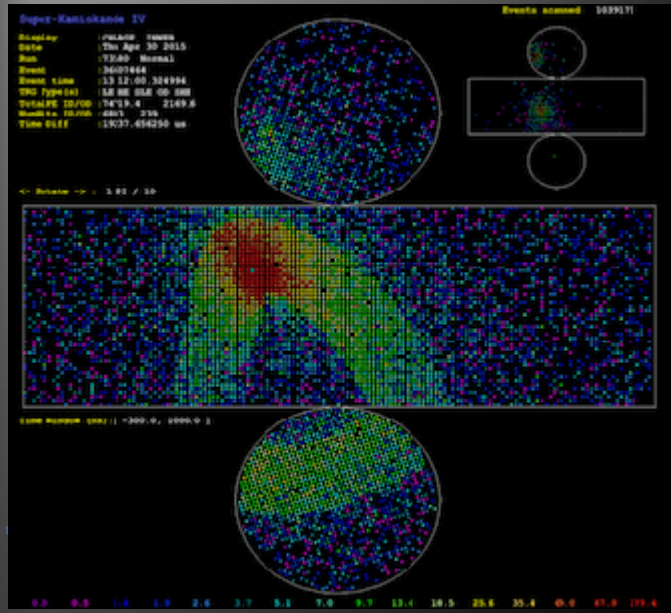

Scientific CCD

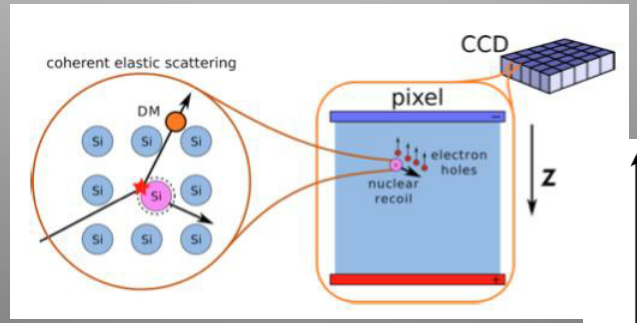

18 x 16 Mpixels CCD 15 × 15 µm2
Readout noise 2 e-

Peak Quantum Efficiency (QE)	82 %@ 560 nm
Cell Size	6.5 µm(H) x 6.5 µm(V)
Effective number of pixels	2048(H) x 2048(V)
Effective area	13.312 mm(H) x 13.312 mm(V)
Readout noise (electrons)	0.9 (median) / 1.5 (rms)

About 10^6 channels/cm^2

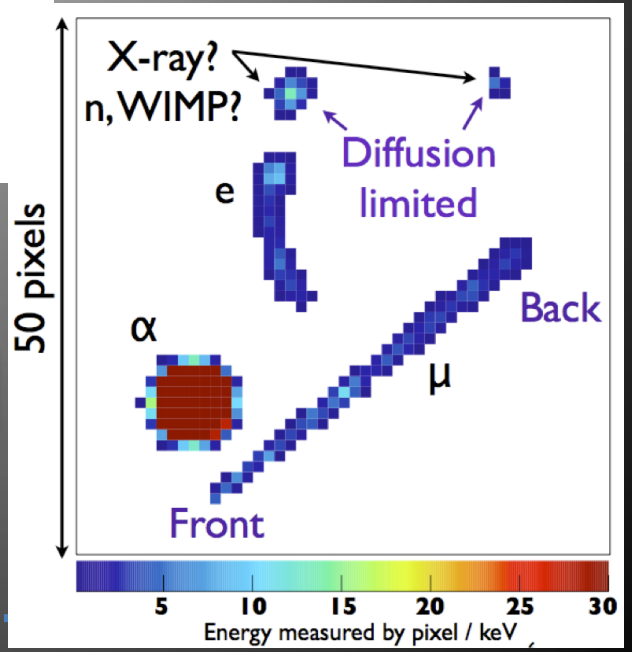

SiPM

- The use of SiPM is rapidly increasing both for scientific and for industrial applications
  - High gain, high PDE, compact form
  - Sensitive to single photons
- SiPM can be read as pixels or as aggregate devices
  - Pixels can be as small as the microcell (10-50 µm scale)
  - SiPM typical size 1-100 mm^2
  - Several integrated chips can read-out many SiPM in aggregated structures
- For scientific applications a photo-multiplier tube replacement is desirable
  - Aggregating the SiPM to a total surface of many cm^2
    - But given the high DCR this is typically interesting only at cryogenic temperature
- This talk will focus on FBK NUV-HD SiPM from FBK

SiPMs

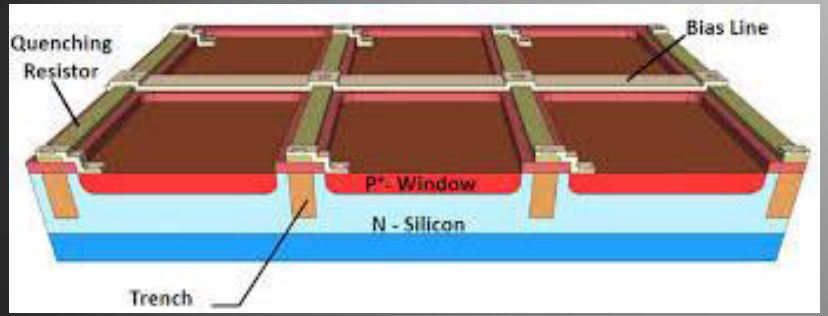

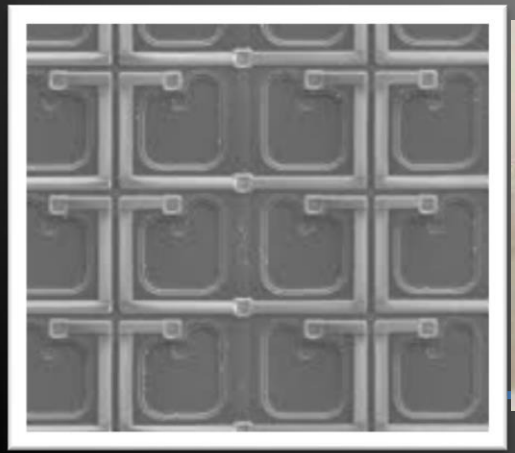

A Single Photon Avalanche Diode operates in Geiger mode

- The intrinsic capacitance of the SPAD is named C_d
  - The intrinsic resistance of the SPAD is named R_d
- The SPAD has a quenching resistance R_q to stop the avalanche
- The quenching exhibits a parasitic capacitance C_q
- At $V_{bias} > V_{breakdown}$ the avalanche is possible
  - With gain $G = V_{ov} C_d$ where $V_{ov} = V_{bias} - V_{breakdown}$

A SiPM is a collection of N SPAD of typical size 20-50 um

- A signal is generated when N_f SPADs are triggered

Accurate electrical models exist to describe the signal and overall electrical parameters of the SiPMs

SiPMs

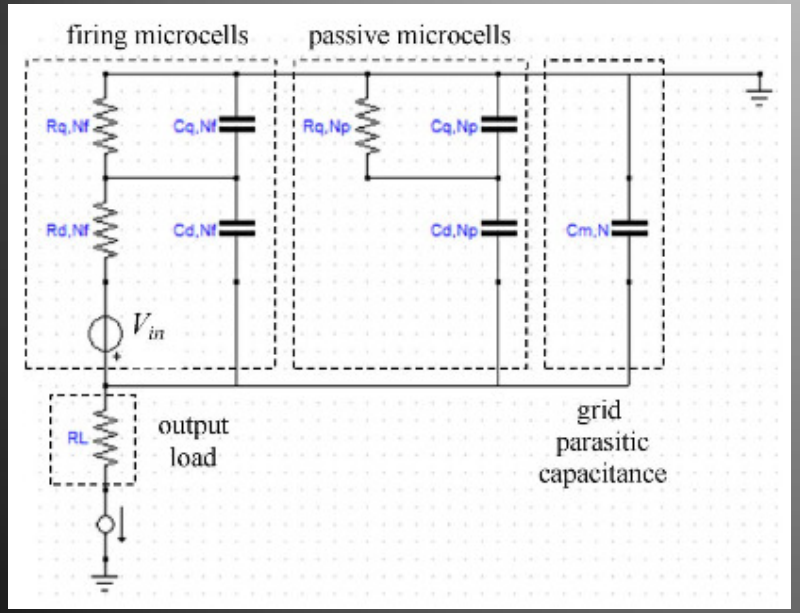

A Single Photon Avalanche Diode operates in Geiger mode

- The intrinsic capacitance of the SPAD is named C_d
  - The intrinsic resistance of the SPAD is named R_d
- The SPAD has a quenching resistance R_q to stop the avalanche
- The quenching exhibits a parasitic capacitance C_q
- At $V_{bias} > V_{breakdown}$ the avalanche is possible
  - With gain $G = V_{ov} C_d$ where $V_{ov} = V_{bias} - V_{breakdown}$

A SiPM is a collection of N SPAD of typical size 20-50 um

- A signal is generated when N_f SPADs are triggered

Accurate electrical models exist to describe the signal and overall electrical parameters of the SiPMs

SiPMs at cryogenic temperature

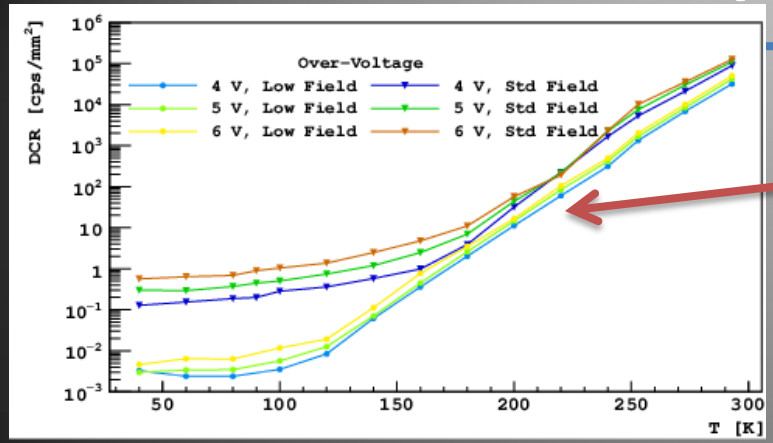

- Dark noise reduction by more than 7 orders of magnitude

SiPMs at cryogenic temperature

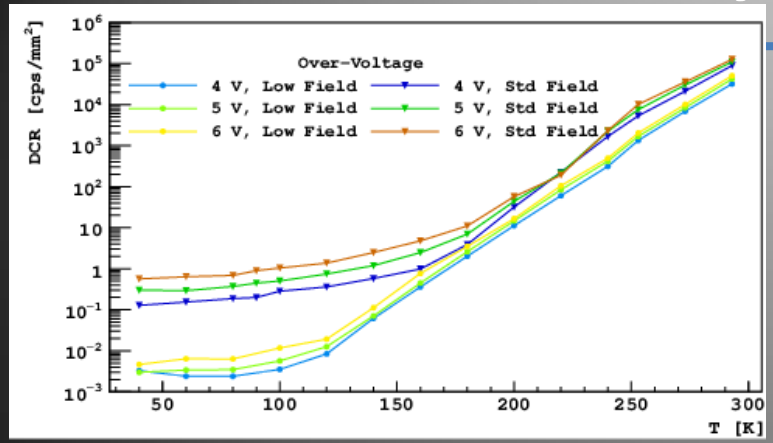

- Dark noise reduction by more than 7 orders of magnitude
- Increased afterpulse
  - Lower gain operation

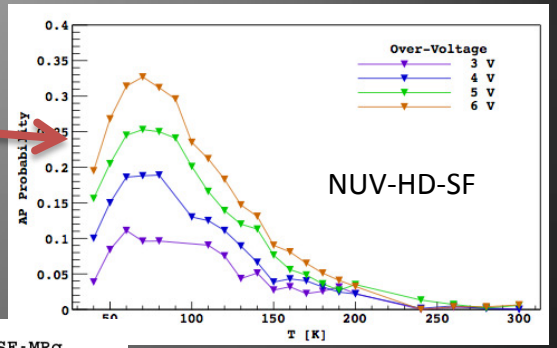

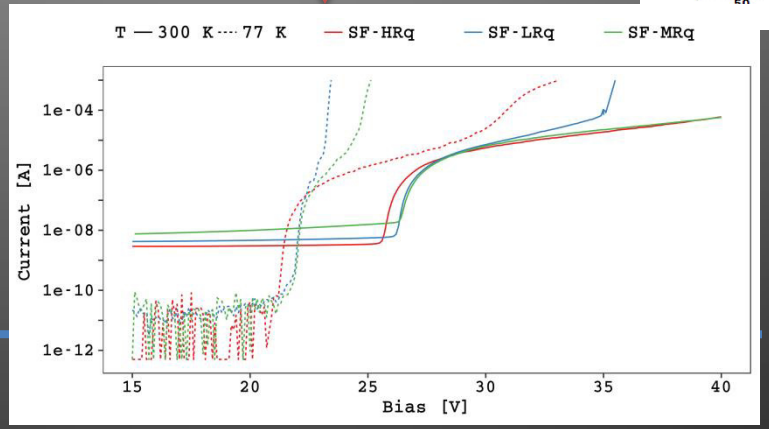

At a given temperature and overvoltage
higher Rq -> longer recharge time
-> lower triggering probability in the same cell
-> lower afterpulse probability
-> lower divergence probability

SiPMs at cryogenic temperature

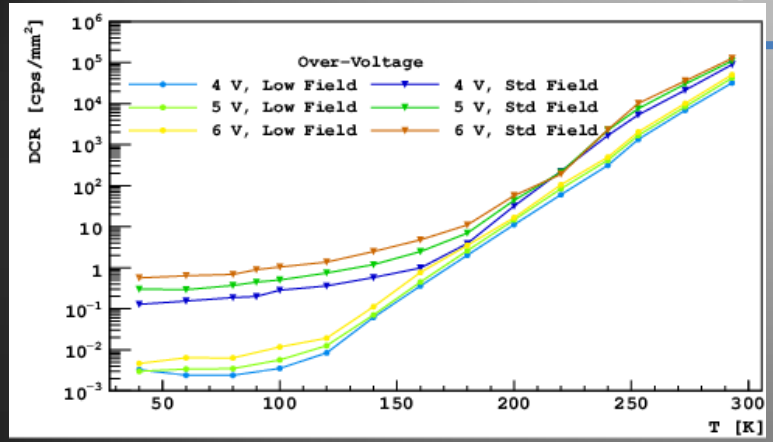

- Dark noise reduction by more than 7 orders of magnitude
- Increased afterpulse
  - Lower gain operation
- For poly-silicon based R_q
  - R_q strongly depends on T
  - Pulse shape changes
    - longer recharge time

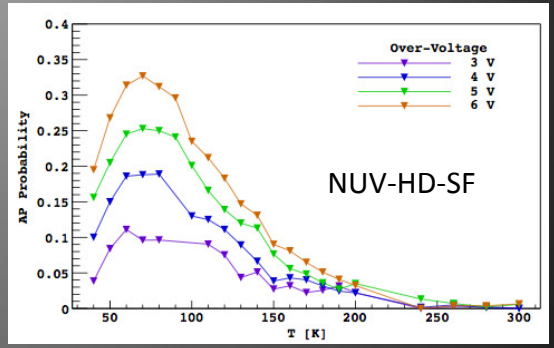

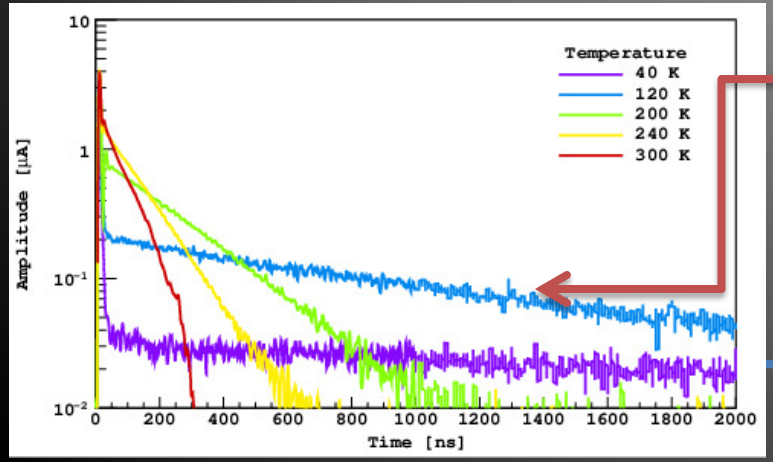

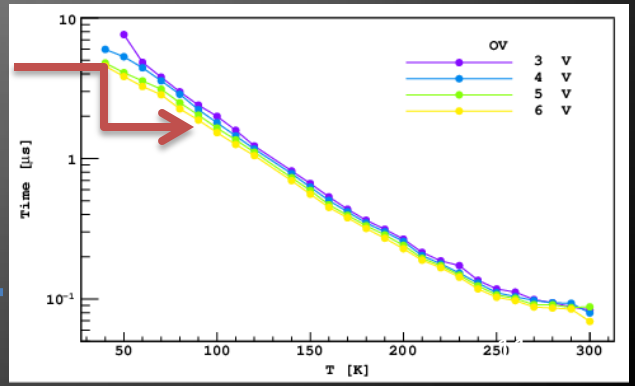

SiPMs at cryogenic temperature

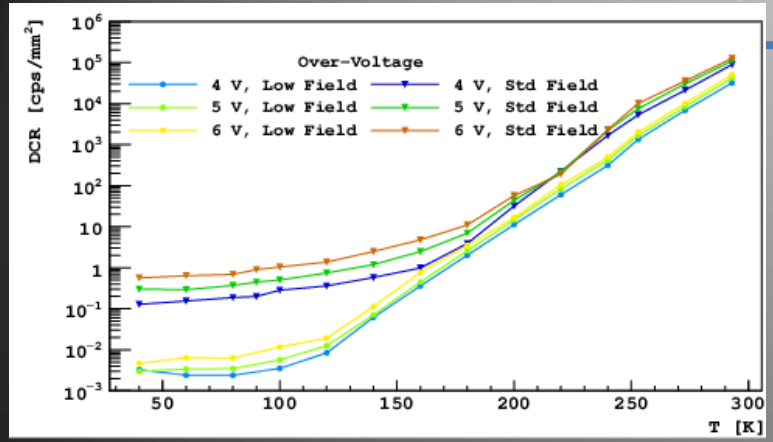

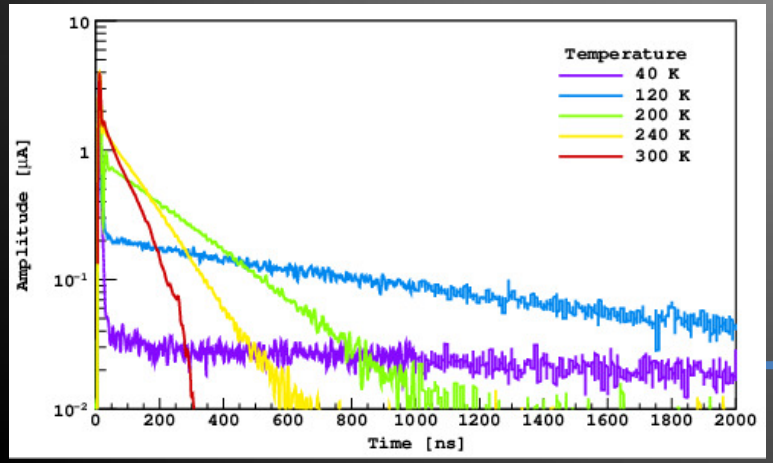

- Dark noise reduction by more than 7 orders of magnitude
- Increased afterpulse
  - Lower gain operation
- For poly-silicon based R_q
  - R_q strongly depends on T
  - Pulse shape changes
    - longer recharge time
- <u>Smaller peak current</u>

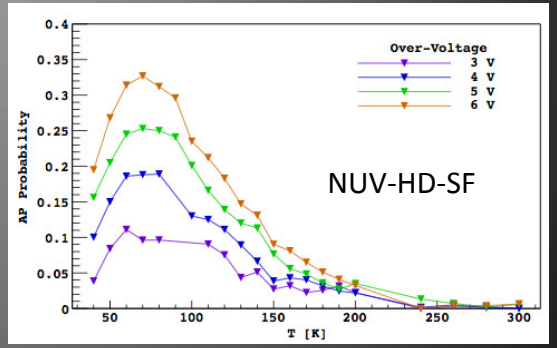

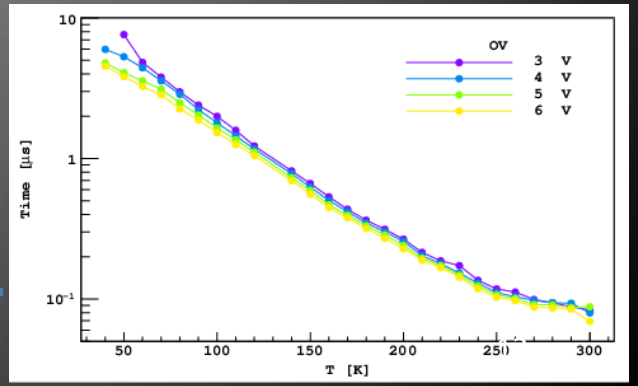

F. Acerbi et al., IEEE TED 64,2,17

LIGHT SENSOR READOUT

Light sensor readout

Light sensors convert photons into charge

- Transformed in a current by an electric field

Photo-sensors are modeled as a current generator with a source capacitance C_d

- Plus an additional load resistor Rl (intrinsic leakage of the device and/or quenching resistor)

Typical values for C_d are in the range of 0.1-100 pF

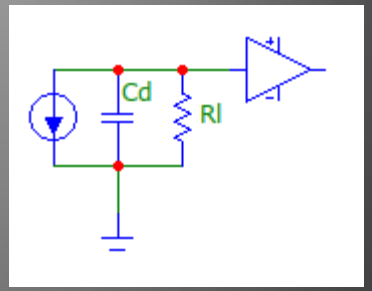

Light sensor readout

Light sensors convert photons into charge

- Transformed in a current thank to an electric field

Photo-sensors are modeled as a current generator with a source capacitance C_d

- Plus an additional load resistor Rl (intrinsic leakage of the device and/or quenching resistor)

Typical values for C_d are in the range of 0.1-100 pF

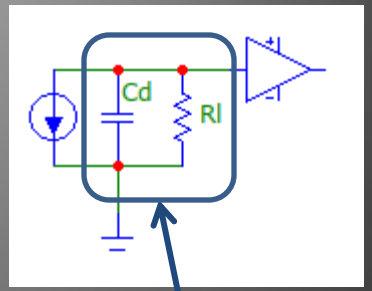

Simplified electrical model

Light sensor readout

Light sensors convert photons into charge

- Transformed in a current by an electric field

Photo-sensors are modeled as a current generator with a source capacitance C_d

- Plus an additional load resistor Rl (intrinsic leakage of the device and/or quenching resistor)

Typical values for C_d are in the range of <u>0.1-100 pF</u>

Several amplifier configurations are available for detecting small currents

- The most common is the trans-impedance amplifier (TIA)
- An alternative design is provided by the charge amplifiers

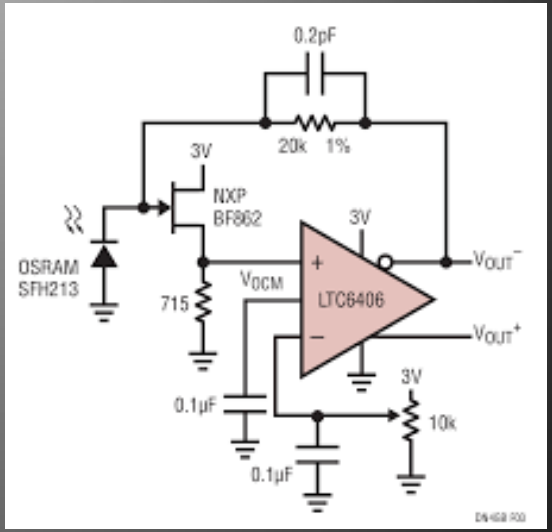

Current amplifiers

- Both TIA & charge amplifiers are based on an inverting topology
  - $V_- = V_+$ implies that the amplifiers provides a $-|I_{PH}|$ along the feedback path
  - At high frequency the noise gain is defined by C_{IN}/C_F
    - C_{IN} directly impact the rise time of the amplifier

For transimpedance amplifiers $R_F < 10\ k\Omega$

- The output signal is $-I_{PH} \cdot R_F$
- The CF capacitor is required to maintain the circuit stable
  - Can be as small al 0.1 pF

For charge amplifiers Rf > 100 MΩ

- The output signal is $-Q_{PH} / C_F$

The two circuits seem similar but are very different

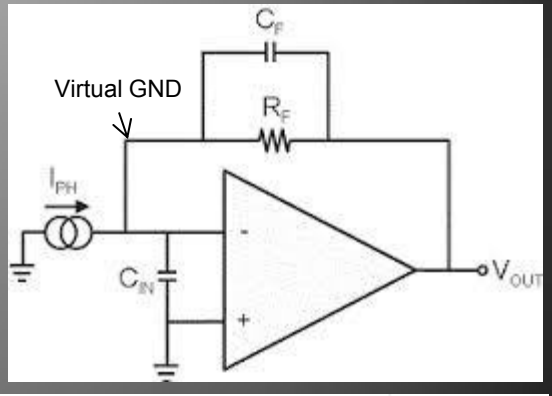

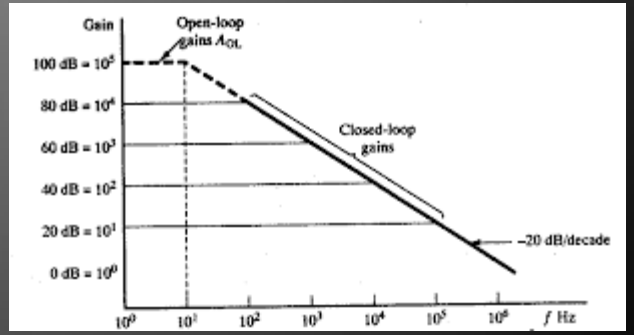

Charge amplifiers

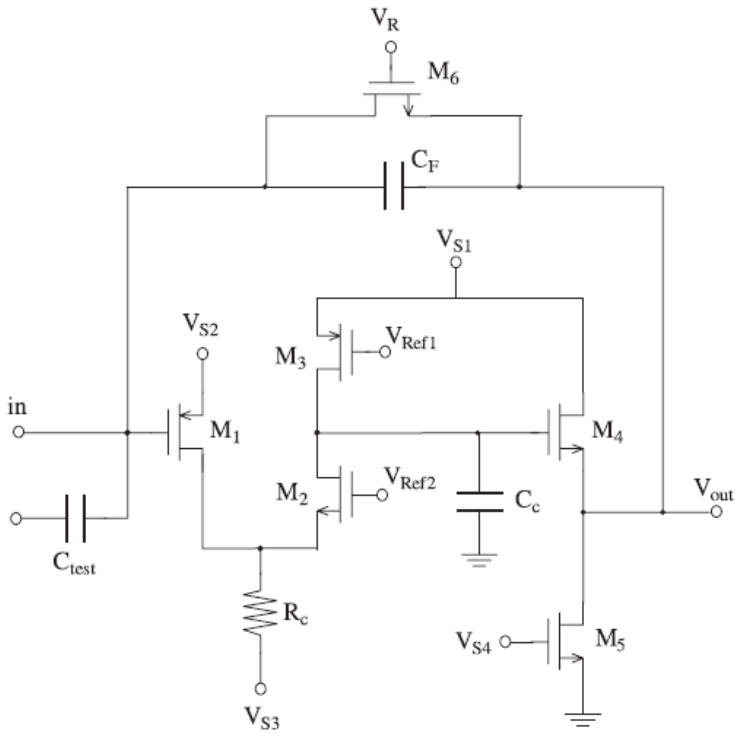

Fig. 4. Schematics of the low-noise low-power charge preamplifier designed in 0.35 CMOS technology.

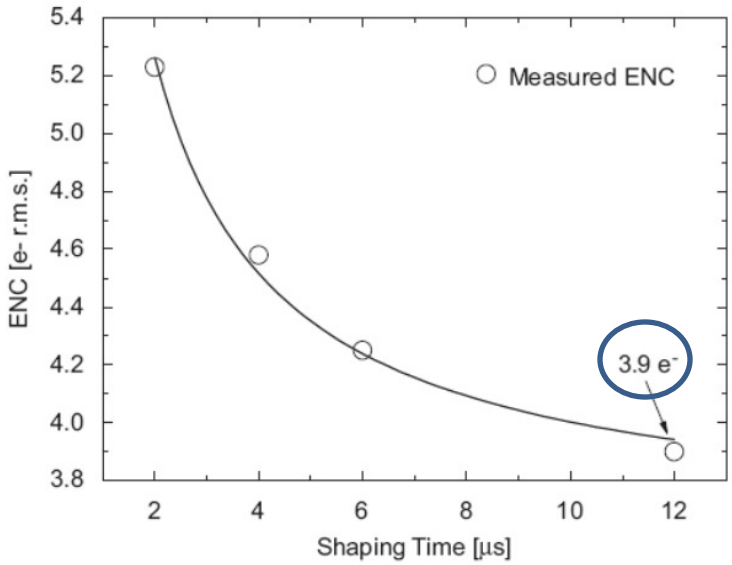

Fig. 5. Measured equivalent noise charge as function of the shaping times for the prototype preamplifier. No detector is connected at the input so that this is the intrinsic noise of the preamplifier. A minimum noise of 3.9 electrons r.m.s. at 12 µs has been measured.

G.Bertuccio, S.Caccia, NIM A579, 2007
G.Bertuccio, Jinst 2015

LOW NOISE AMPLIFIERS

Heterojunction electronics

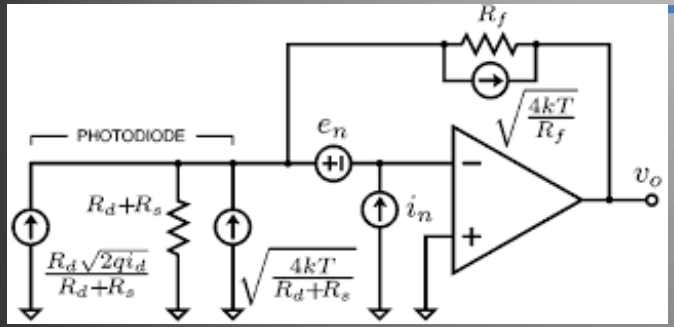

For fast TIA amplifiers with R_f ~ 1-10 kΩ

- $n(R_f) << e_n * NG$ & $i_n * R_f << e_n * NG$

MOS technology typically

- e_n ~ 4 nV/√Hz & i_n ~ 10 fA/√Hz

MOS technology may not be the best choice

Heterojunction electronics

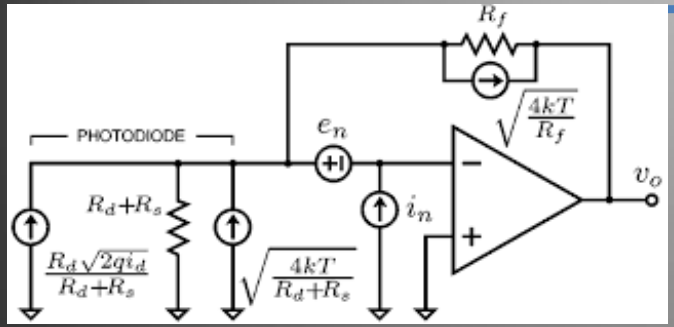

For fast TIA amplifiers with R_f ~ 1-10 kΩ

- $n(R_f) << e_n * NG$ & $i_n * R_f << e_n * NG$

MOS technology typically

- e_n ~ 4 nV/√Hz & i_n ~ 10 fA/√Hz

MOS technology may not be the best choice

- Most producers are distributing heterojunction BJT based amplifiers
  - For high bandwidth applications GHz
  - For very low noise applications sub-nV/√Hz

- HBTs are great signal amplifiers at cryogenic temperature
  - They are BJT -> very low e_n
  - Low 1/f noise
  - Noise and BW are better at cryogenic temperature

LMH6629 characterization

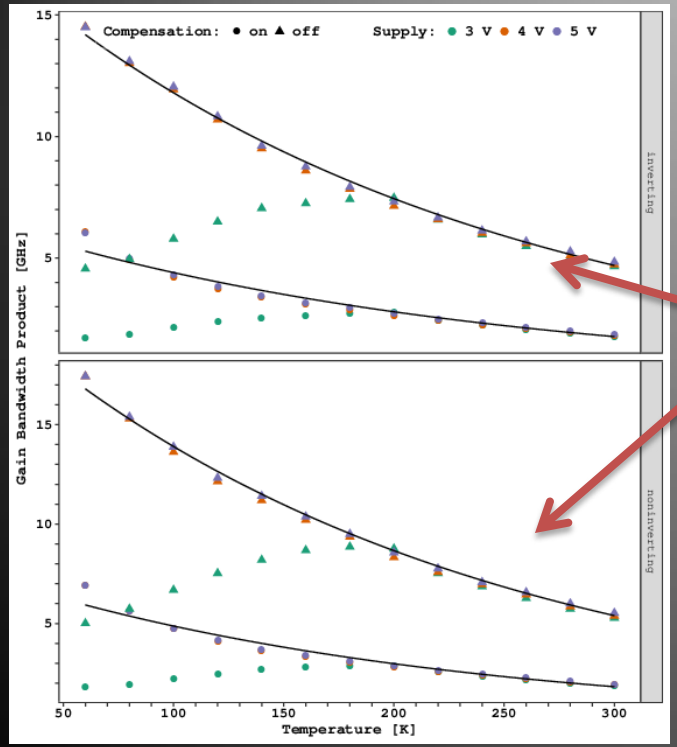

LMH6629 from TI:

- Works down to 40 K
- Stable for |Av| > 10
- Very high bandwidth
  - Increasing at low T
  - ~0.2 pF in Fb path
- Very low noise
- Max bias 5 V
  - 60 – 80 mW
  - P_{out}1dB = 16 dBm (3.8 Vpp)

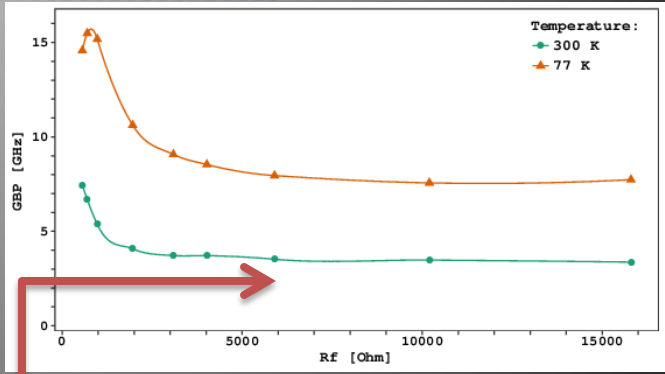

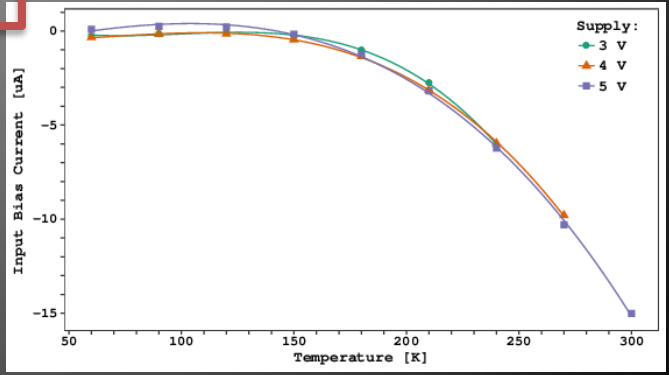

LMH6629 Noise Model

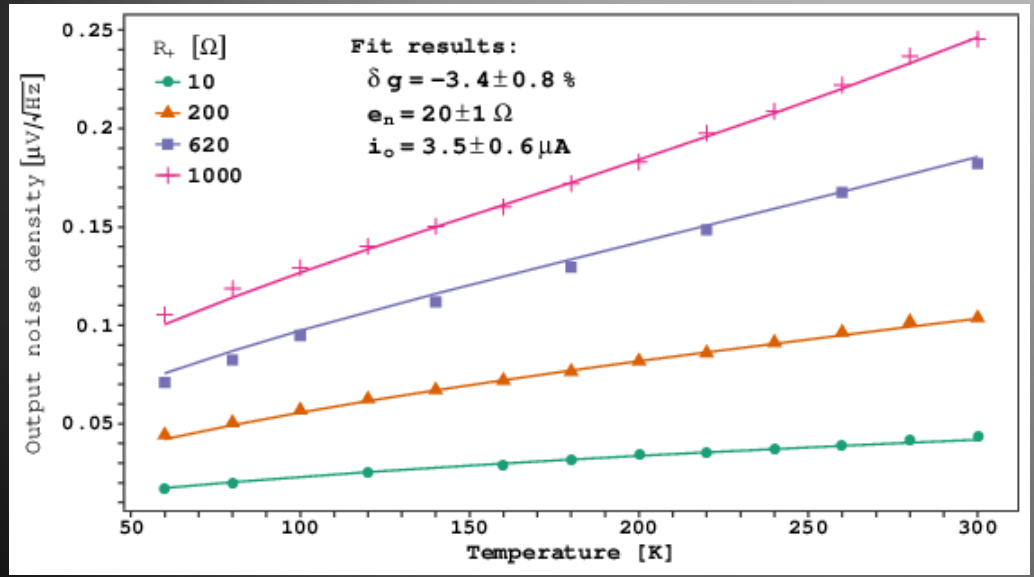

$$N_o = \frac{G}{2}\sqrt{4k_B T R_{eq}^J + e_n^2(T) + i_n^2(T) R_i^2}$$

constant

Where:

- R_{eq} accounts for all resistors
- e_n is modeled as a Johnson source
- i_n is modeled as Shotky noise of $|i_b| + |i_o|$
- N is the output noise density @ 1MHz

The fit reproduces the data at better than 2.5 %

<u>The voltage noise density of the LMH6629 is equivalent to a 20 Ω resistor</u>

M D'Incecco et al., IEEE TNS 65,4,18

SINGLE SIPM READOUT

SiPM simplified electric model

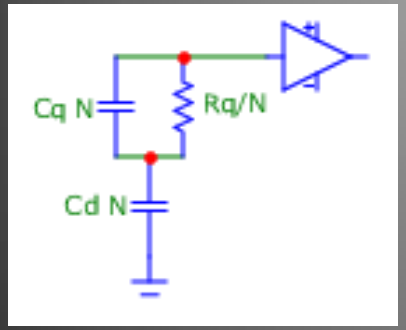

- BW & output noise spectrum depends on the input load
- A simplified model can be used
  - Valid if $N_f << N$

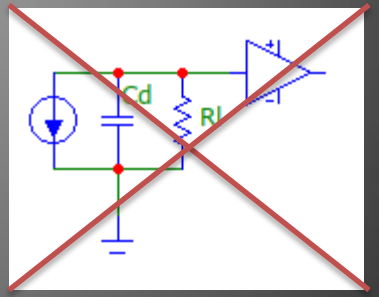

SiPM simplified electric model

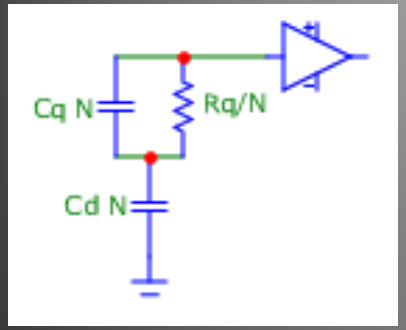

- BW & output noise spectrum depends on the input load
- A simplified model can be used
  - Valid if $N_f << N$

SiPM seen by a RLC bridge

Frequency	R_{eq}^{300K} [$\Omega\,cm^2$]	C_{eq}^{300K} [nF/cm^2]	R_{eq}^{77K} [$\Omega\,cm^2$]	C_{eq}^{77K} [nF/cm^2]
10 kHz	35	6.3	74	6.7
100 kHz	14	6.2	63	6.6
200 kHz	13	6.2	63	6.5
500 kHz	12	6.1	62	5.8
1 MHz	11	5.9	61	4.2

SiPM simplified electric model

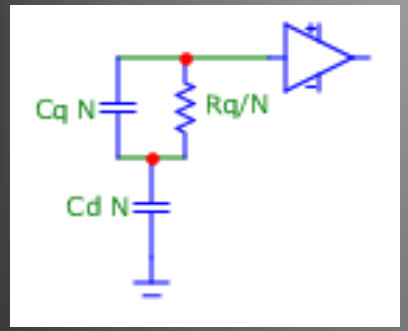

- BW & output noise spectrum depends on the input load
- A simplified model can be used
  - Valid if $N_f << N$
- A transition happens at $F_T = 1/(2 \pi Rq Cq) \sim 20$- 30 MHz

To be compared to photodiodes 0.1 – 100 pF

SiPM seen by a RLC bridge

Frequency	R_{eq}^{300K} [$\Omega\,cm^2$]	C_{eq}^{300K} [nF/cm^2]	R_{eq}^{77K} [$\Omega\,cm^2$]	C_{eq}^{77K} [nF/cm^2]
10 kHz	35	6.3	74	6.7
100 kHz	14	6.2	63	6.6
200 kHz	13	6.2	63	6.5
500 kHz	12	6.1	62	5.8
1 MHz	11	5.9	61	4.2

SiPM simplified electric model

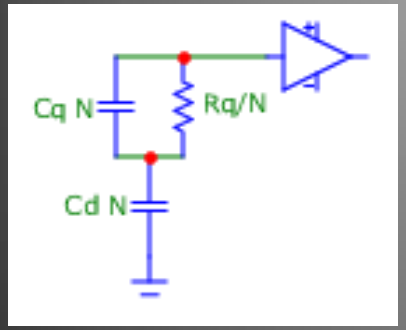

- BW & output noise spectrum depends on the input load
- A simplified model can be used
  - Valid if $N_f << N$
- A transition happens at $F_T = 1/(2 \pi Rq Cq) \sim 20\text{-}30$ MHz

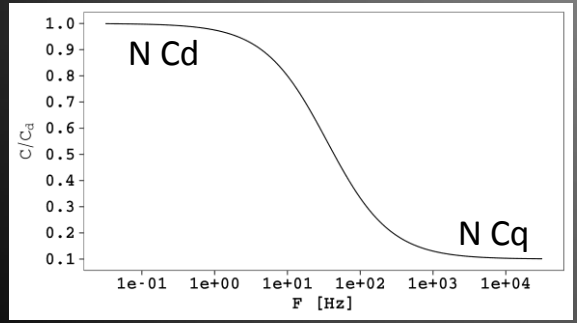

SiPM seen by a RLC bridge

Frequency	R_{eq}^{300K} [$\Omega\,cm^2$]	C_{eq}^{300K} [nF/cm^2]	R_{eq}^{77K} [$\Omega\,cm^2$]	C_{eq}^{77K} [nF/cm^2]
10 kHz	35	6.3	74	6.7
100 kHz	14	6.2	63	6.6
200 kHz	13	6.2	63	6.5
500 kHz	12	6.1	62	5.8
1 MHz	11	5.9	61	4.2

SiPM simplified electric model

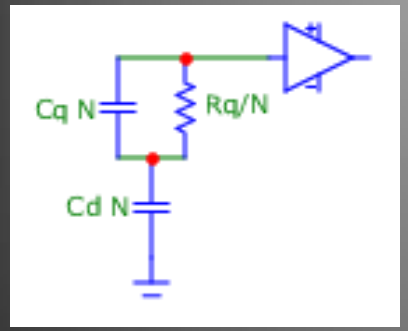

- BW & output noise spectrum depends on the input load
- A simplified model can be used
  - Valid if $N_f << N$
- A transition happens at $F_T = 1/(2\,\pi\,Rq\,Cq) \sim 20\text{-}\,30$ MHz
  - But at cryogenic temperature Rq increases

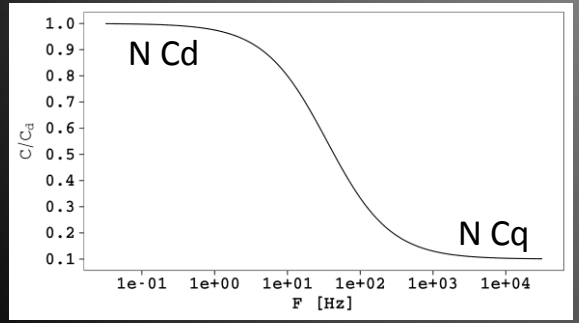

SiPM seen by a RLC bridge

Frequency	R_{eq}^{300K} [$\Omega\,cm^2$]	C_{eq}^{300K} [nF/cm^2]	R_{eq}^{77K} [$\Omega\,cm^2$]	C_{eq}^{77K} [nF/cm^2]
10 kHz	35	6.3	74	6.7
100 kHz	14	6.2	63	6.6
200 kHz	13	6.2	63	6.5
500 kHz	12	6.1	62	5.8
1 MHz	11	5.9	61	4.2

$$F_T \simeq \frac{1}{2\pi C_{eq} R_{eq}} \frac{C_d}{C_q} \simeq \frac{10}{2\pi C_{eq} R_{eq}} \simeq 4\ \text{MHz}$$

SiPM simplified electric model

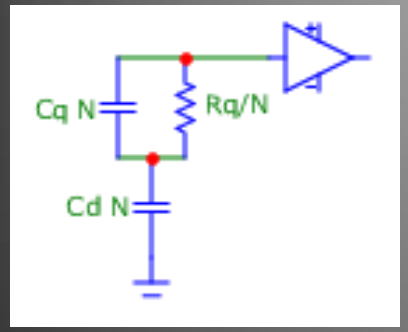

- BW & output noise spectrum depends on the input load
- A simplified model can be used
  - Valid if $N_f << N$
- A transition happens at $F_T = 1/(2 \pi Rq Cq) \sim 20$- 30 MHz
  - But at cryogenic temperature Rq increases
- This transition is important because it affects the noise gain:
  - The capacitance decreases **GOOD**
  - The series resistance (Rq/N) vanishes **BAD**

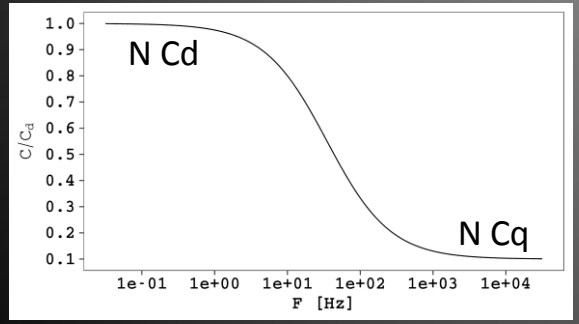

SiPM seen by a RLC bridge

Frequency	R_{eq}^{300K} [$\Omega\,cm^2$]	C_{eq}^{300K} [nF/cm^2]	R_{eq}^{77K} [$\Omega\,cm^2$]	C_{eq}^{77K} [nF/cm^2]
10 kHz	35	6.3	74	6.7
100 kHz	14	6.2	63	6.6
200 kHz	13	6.2	63	6.5
500 kHz	12	6.1	62	5.8
1 MHz	11	5.9	61	4.2

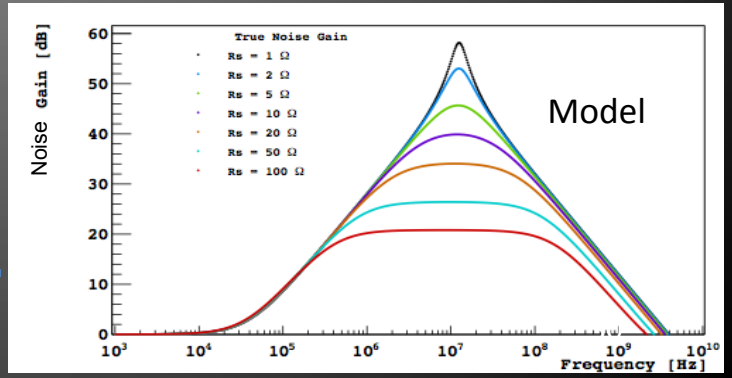

TIA design & results on single SiPMs

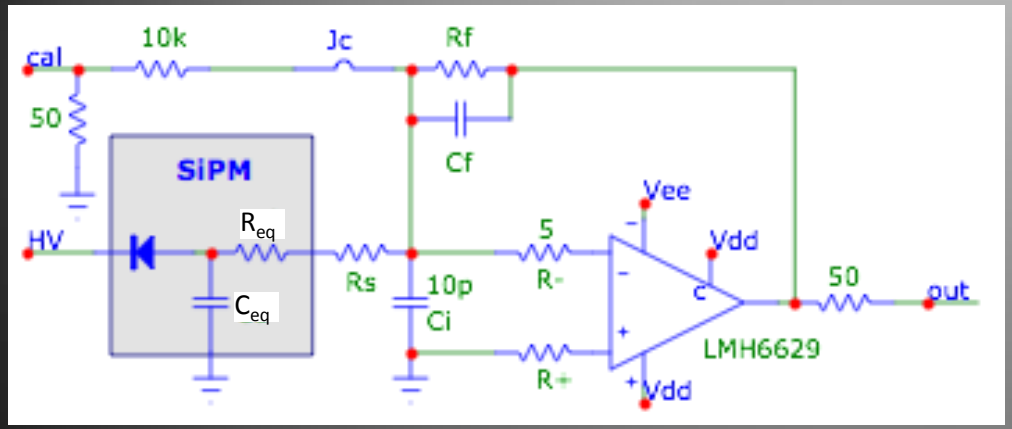

Standard Transimpedance design except:

- Few tweaks for stabilization
  - R_+ , R_-, C_i
- C_f is due to parasitic effects (~0.2 pF)
- The series resistor Rs

TIA design & results on single SiPMs

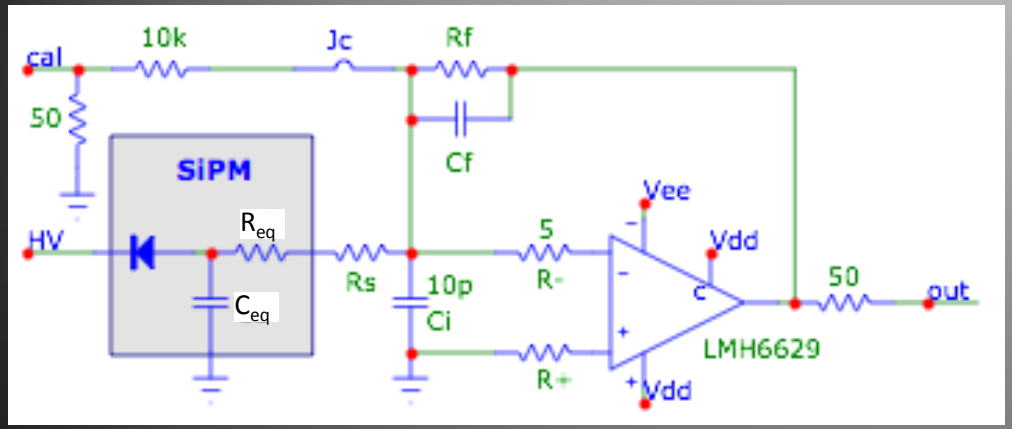

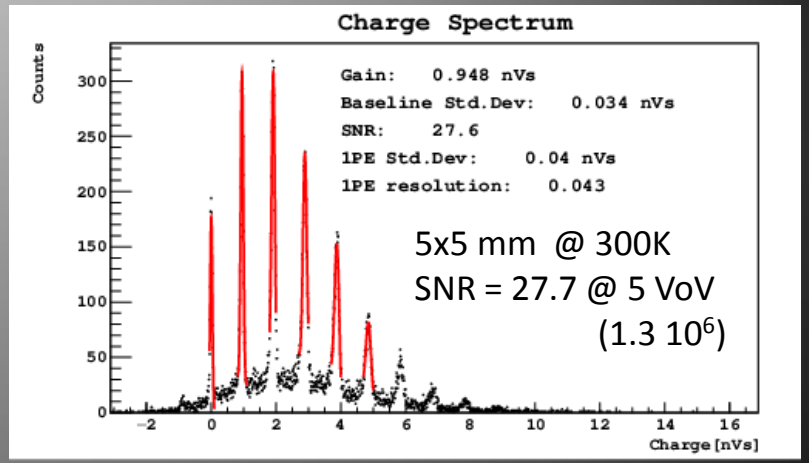

TIA design & results on single SiPMs

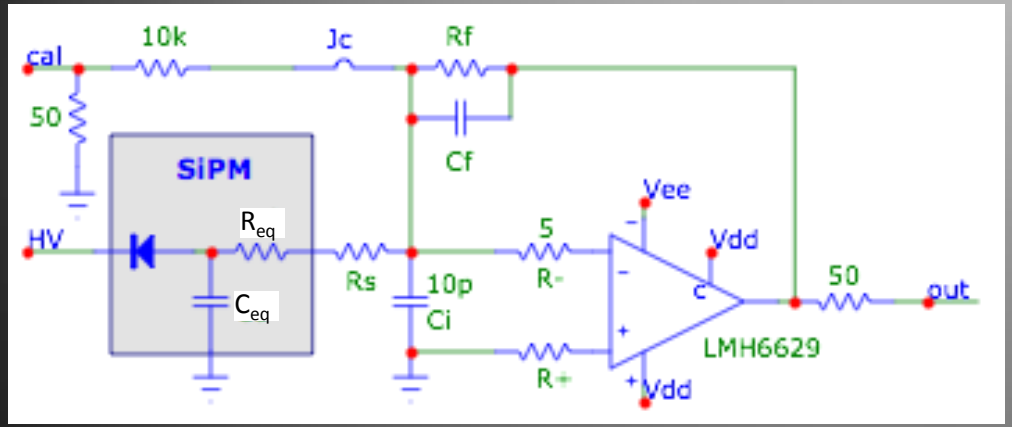

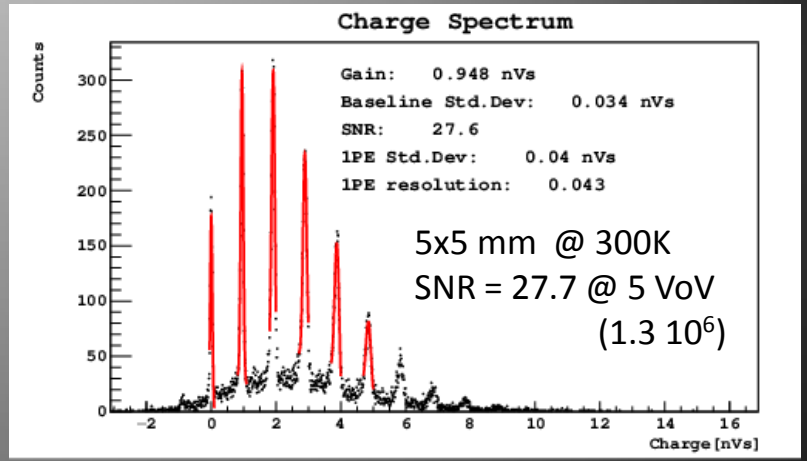

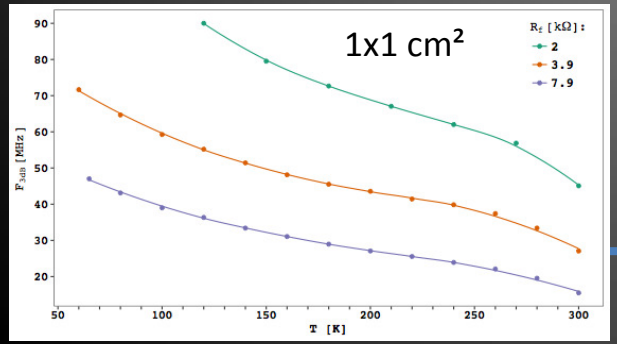

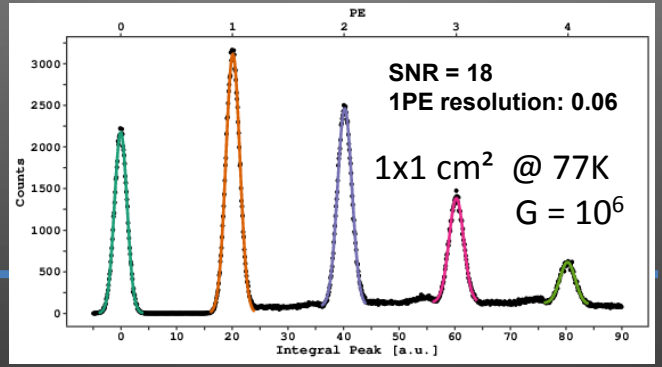

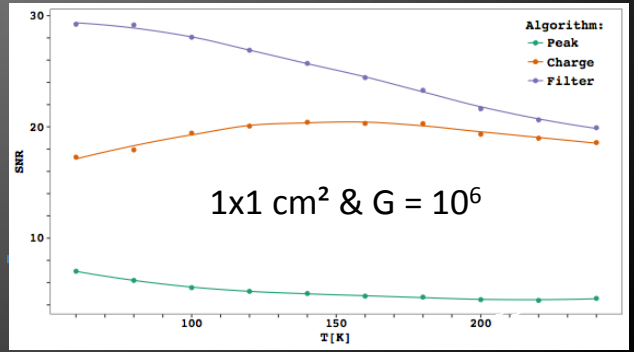

Matched filtering

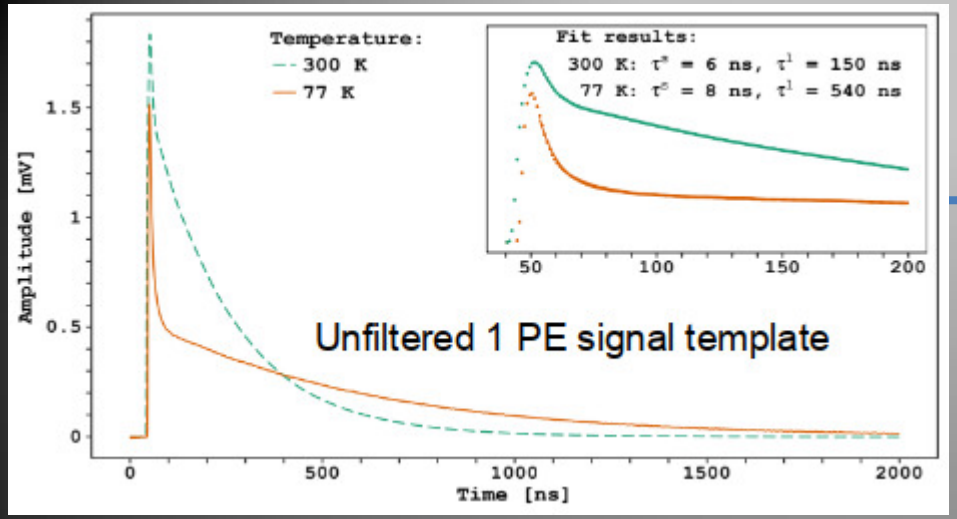

Matched filter is the optimal linear filter to extract a signal of know shape in the presence of additive stochastic noise.

The filtered signal is obtained by cross-correlating the raw waveform for the signal template

The output is symmetric around the peak, giving a better identification of the timing.

We successfully tested an online FPGA based implementation

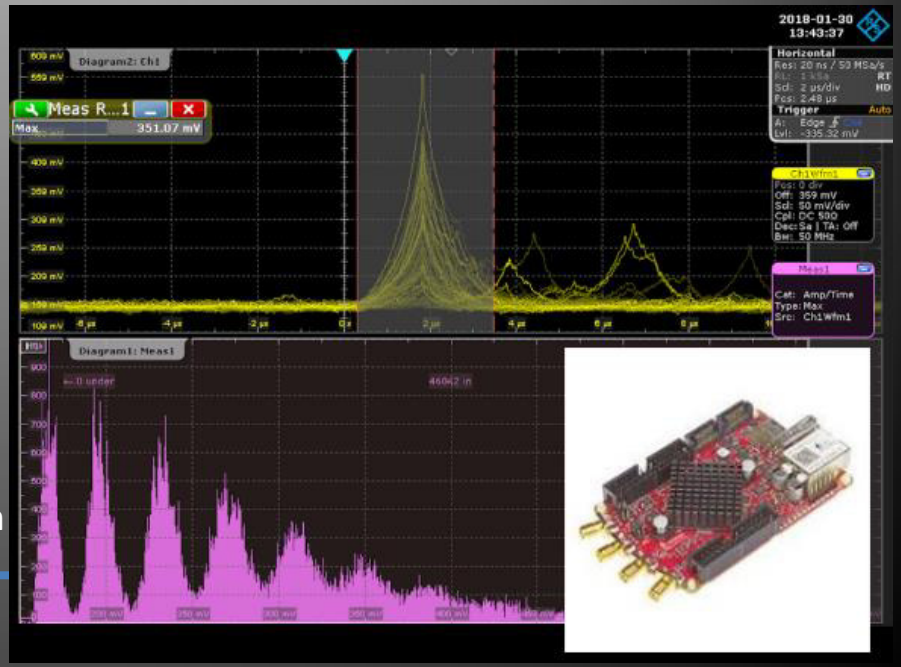

Timing

1 cm^2 @ 77 K:
Using matched filter
Gain 10^6

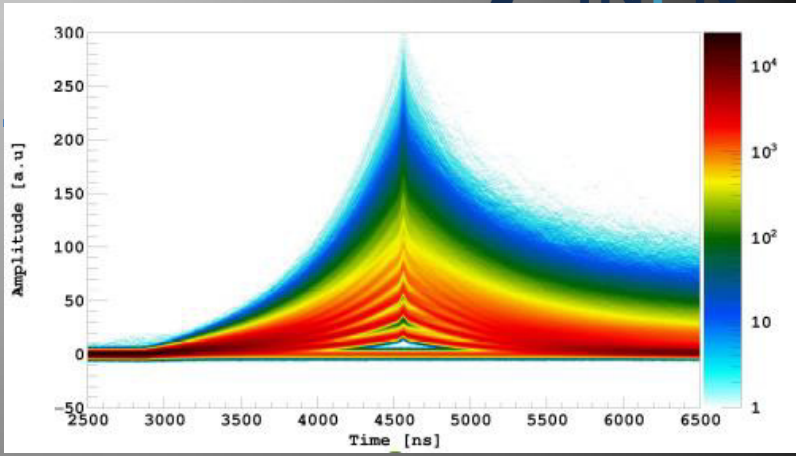

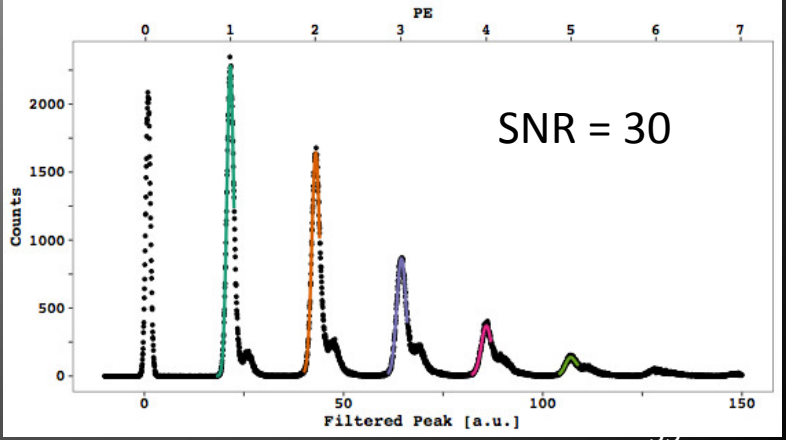

Timing

1 cm^2 @ 77 K:
Using matched filter
Gain 10^6

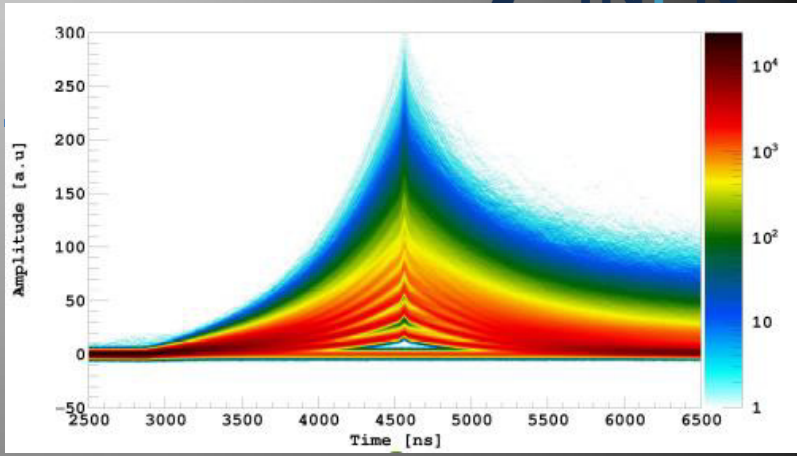

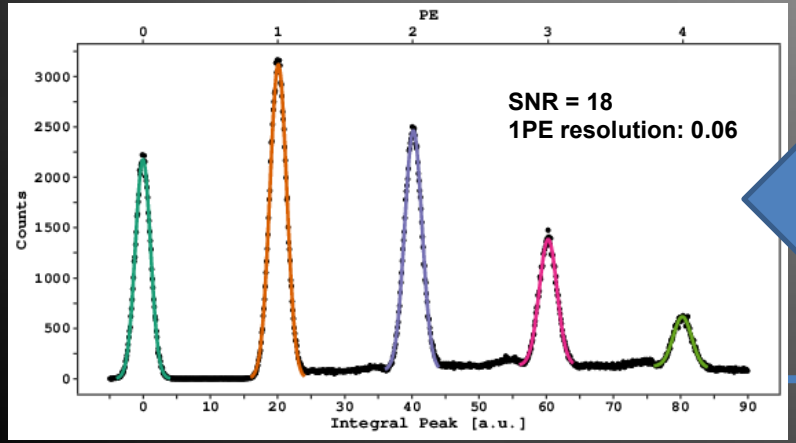

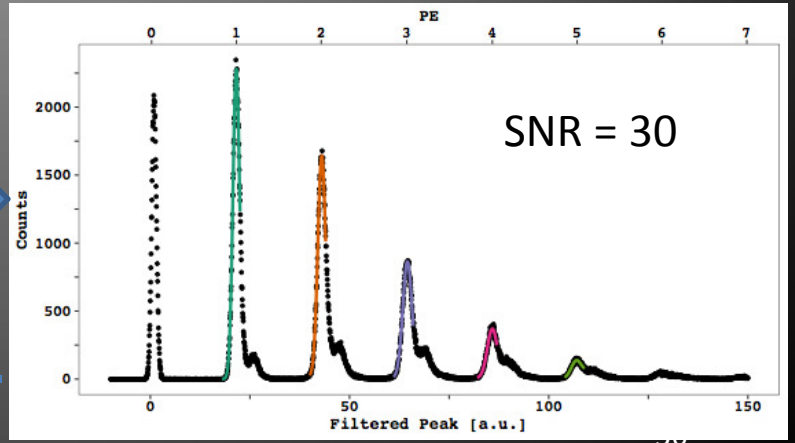

Timing

1 cm^2 @ 77 K:
Using matched filter
Gain 10^6

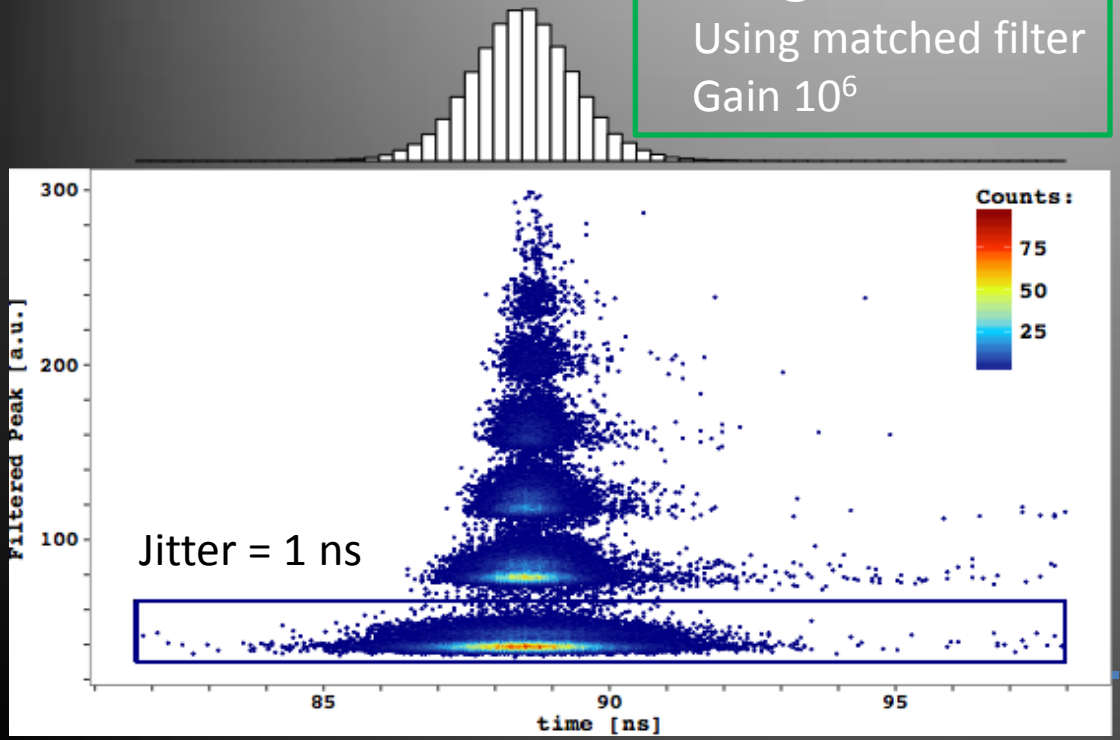

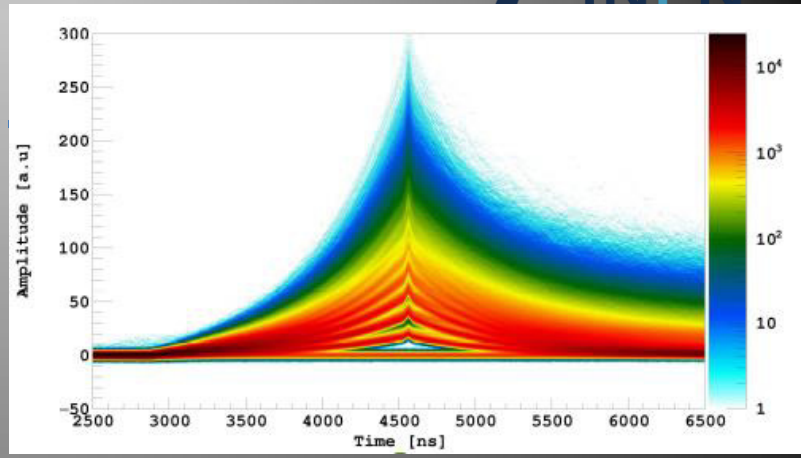

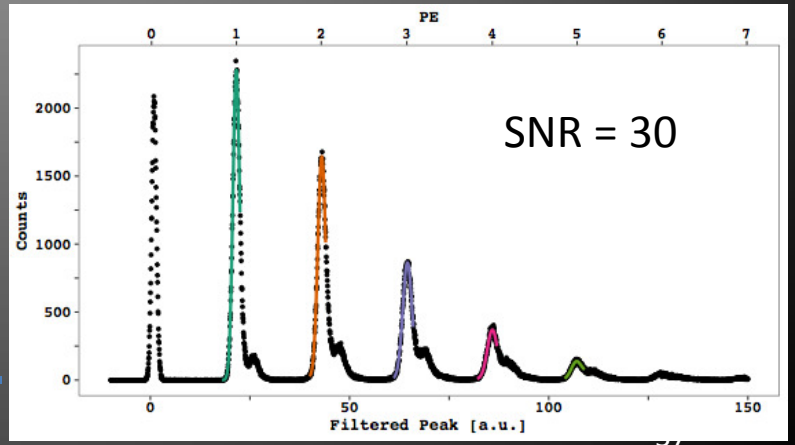

Noise Model for $F < \frac{1}{2\pi C_q R_q} \simeq 4$ MHz

$$S_I^{\max} = \frac{G}{\tau} \propto \frac{G}{R_{eq} + R_s}$$

$$n_I = \frac{\sqrt{4K_B T(R_{eq} + R_s + R_n)}}{R_{eq} + R_s}$$

$$N_O = R_f \times \int n_I \, df$$

$$S/N \propto \frac{G}{\sqrt{4K_B T(R_{eq} + R_s + R_n)}}$$

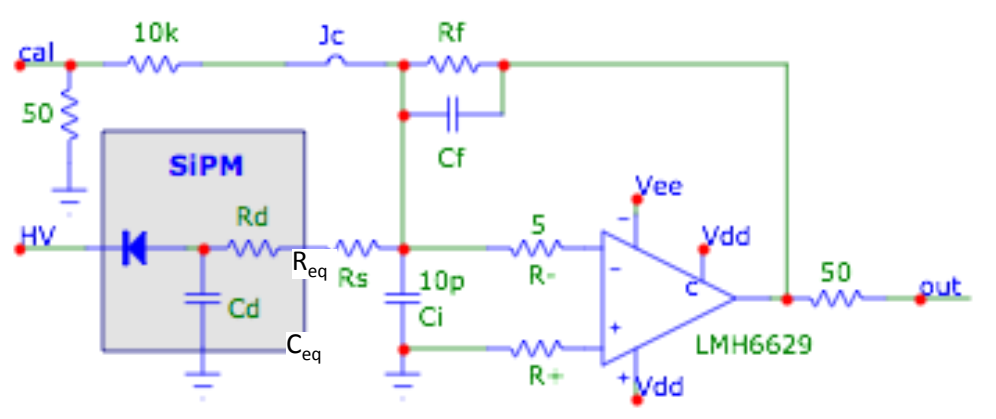

Noise Model for $F < \frac{1}{2\pi C_q R_q} \simeq 4$ MHz

$$S_I^{\max} = \frac{G}{\tau} \propto \frac{G}{R_{eq} + R_s}$$

$$n_I = \frac{\sqrt{4K_B T(R_{eq} + R_s + R_n)}}{R_{eq} + R_s}$$

$$N_O = R_f \times \int n_I \, df$$

10% of noise

$$S/N \propto \frac{G}{\sqrt{4K_B T(R_{eq} + R_s + R_n)}}$$

1 cm^2 @ 77 K:
R_n = 20 Ω
R_s = 20 Ω
R_{eq} = 60 Ω
Rf = 3.9 k Ω
n_o = -141 dBm

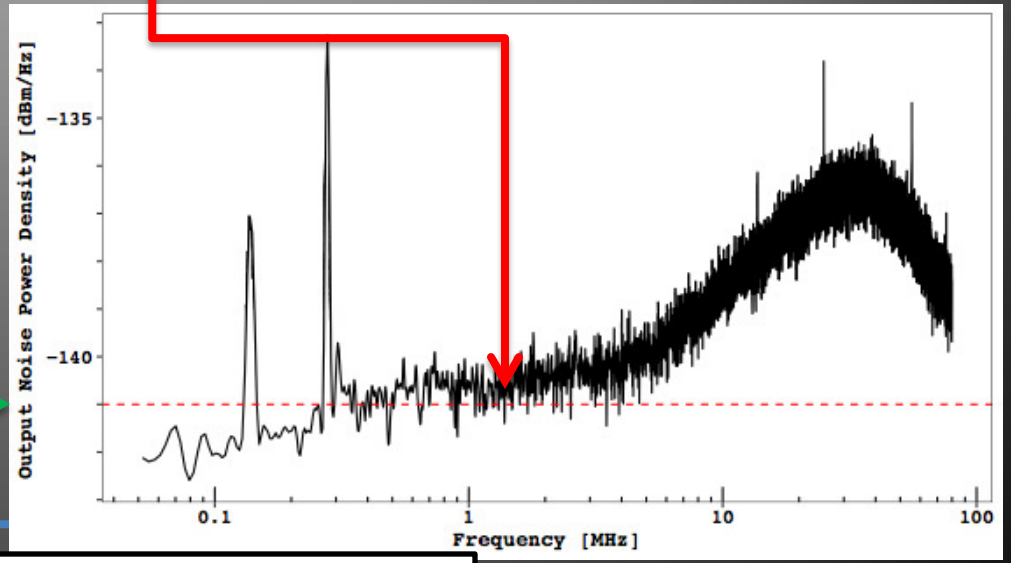

M D'Incecco et al., IEEE TNS 65,4,18

MULTIPLE SIPMS READOUT

6 cm² SiPM readout

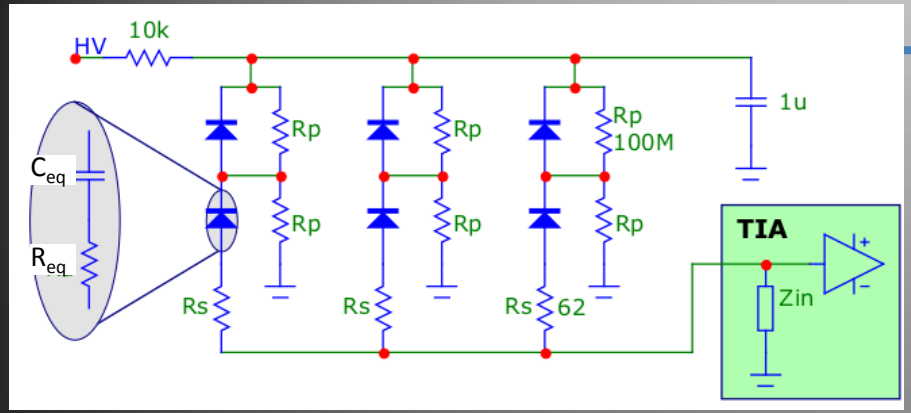

- To read more SiPMs with the same amplifier a partial ganging solution is used
- This design increases the capacitance seen by the TIA only by 50%
- <u>For cryogenic use a precision voltage divider is required</u>
  - Otherwise the voltage division will be defined by the leakage current

6 cm² SiPM readout

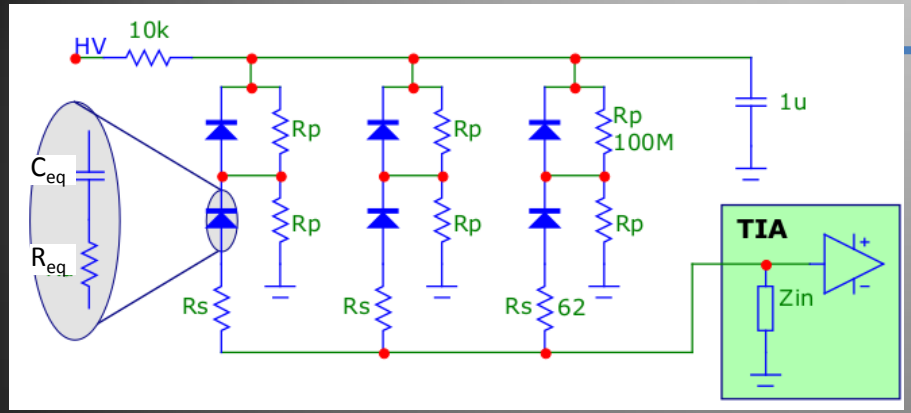

$$S_I^{\max} = \frac{G}{2\tau} \propto \frac{G}{2\,(2R_{eq} + R_s)}$$

$$n_I = \frac{\sqrt{4K_BT((2R_{eq} + R_s)/3 + R_n)}}{(2R_{eq} + R_s)/3}$$

$$S/N \propto \frac{G}{2 \times 3\sqrt{4K_BT((2R_{eq} + R_s)/3 + R_n)}}$$

6 cm² SiPM readout

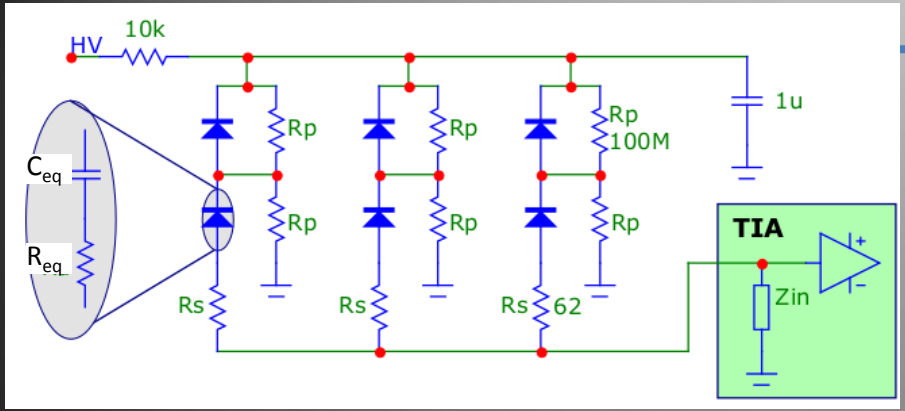

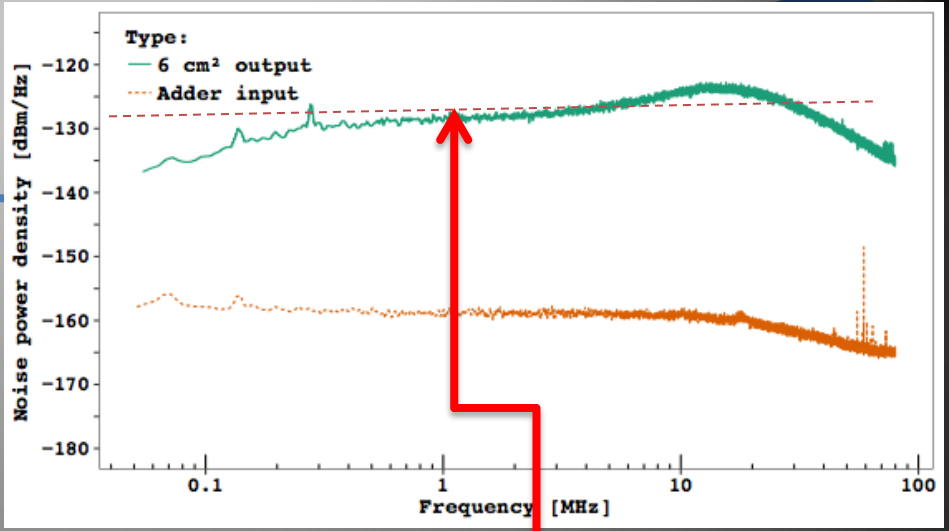

6 cm² @ 77 K:
R_n = 20 Ω
R_s = 60 Ω
R_{eq} = 60 Ω
R_f = 10 k Ω
n_o = -127 dBm

$$S_I^{max} = \frac{G}{2\tau} \propto \frac{G}{2\,(2R_{eq}+R_s)} \simeq \frac{G}{6R_s}$$

$$n_I = \frac{\sqrt{4K_BT((2R_{eq}+R_s)/3+R_n)}}{(2R_{eq}+R_s)/3} \simeq \frac{\sqrt{4K_BT(R_{eq}+R_n)}}{R_{eq}}$$

15% of noise

$$S/N \propto \frac{G}{2\times 3\sqrt{4K_BT((2R_{eq}+R_s)/3+R_n)}} \simeq \frac{G}{6\sqrt{4K_BT(R_{eq}+R_n)}}$$

6 cm^2 @ 77 K

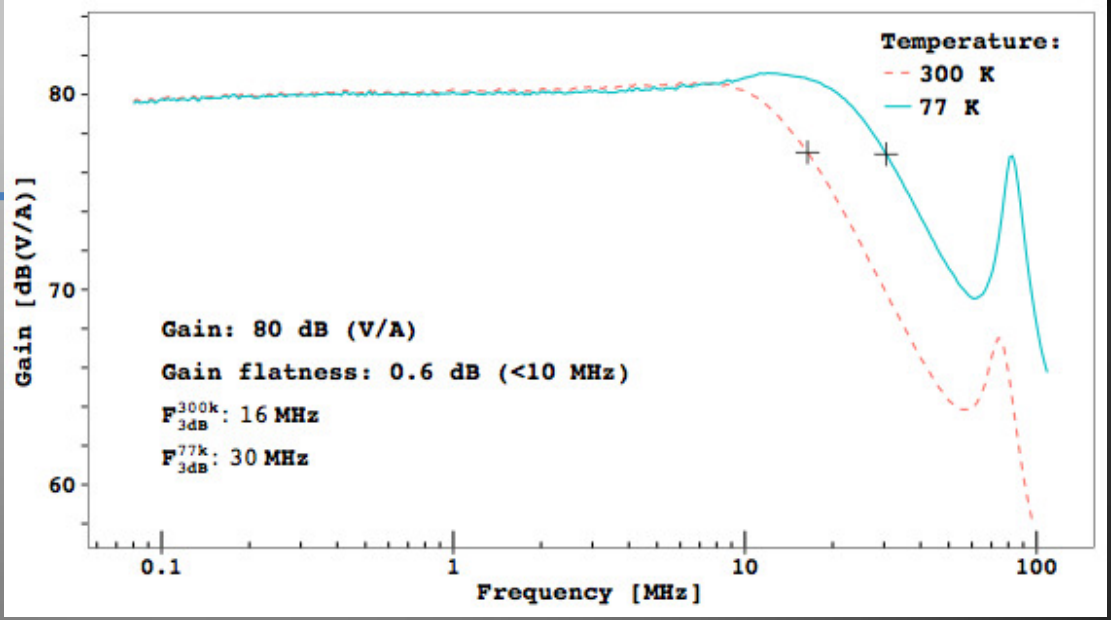
Temperature:
300 K
77 K
Gain: 80 dB (V/A)
Gain flatness: 0.6 dB (<10 MHz)
F_{3dB}^{300k}: 16 MHz
F_{3dB}^{77k}: 30 MHz
Gain [dB(V/A)]
80
70
60
0.1
1
10
100
Frequency [MHz]

6 cm^2 @ 77 K

5 VoV = 1.5 10^6

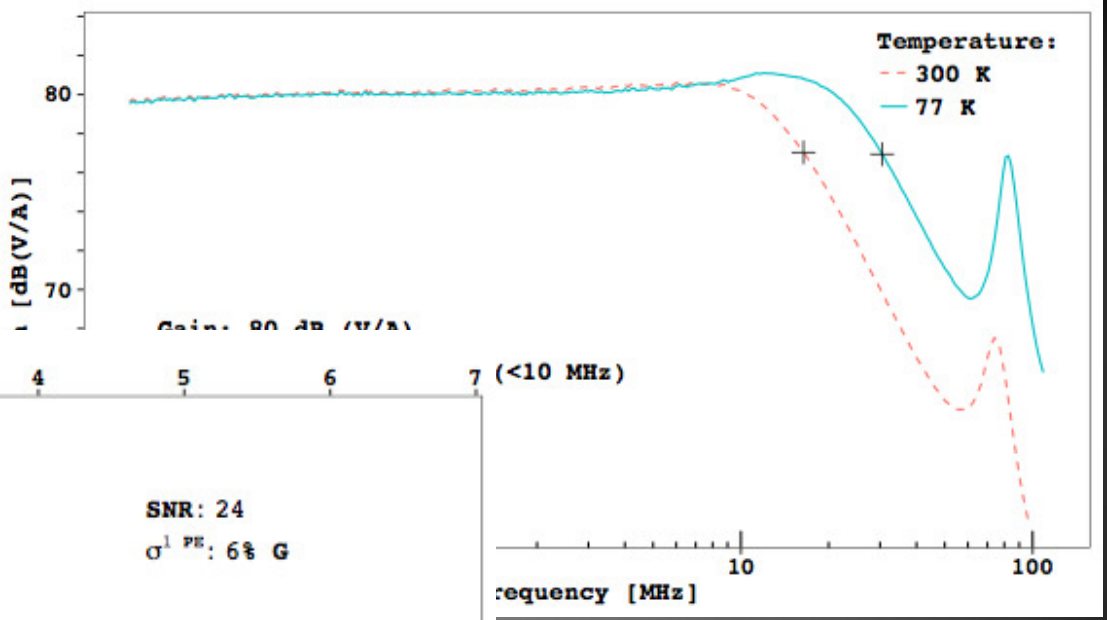

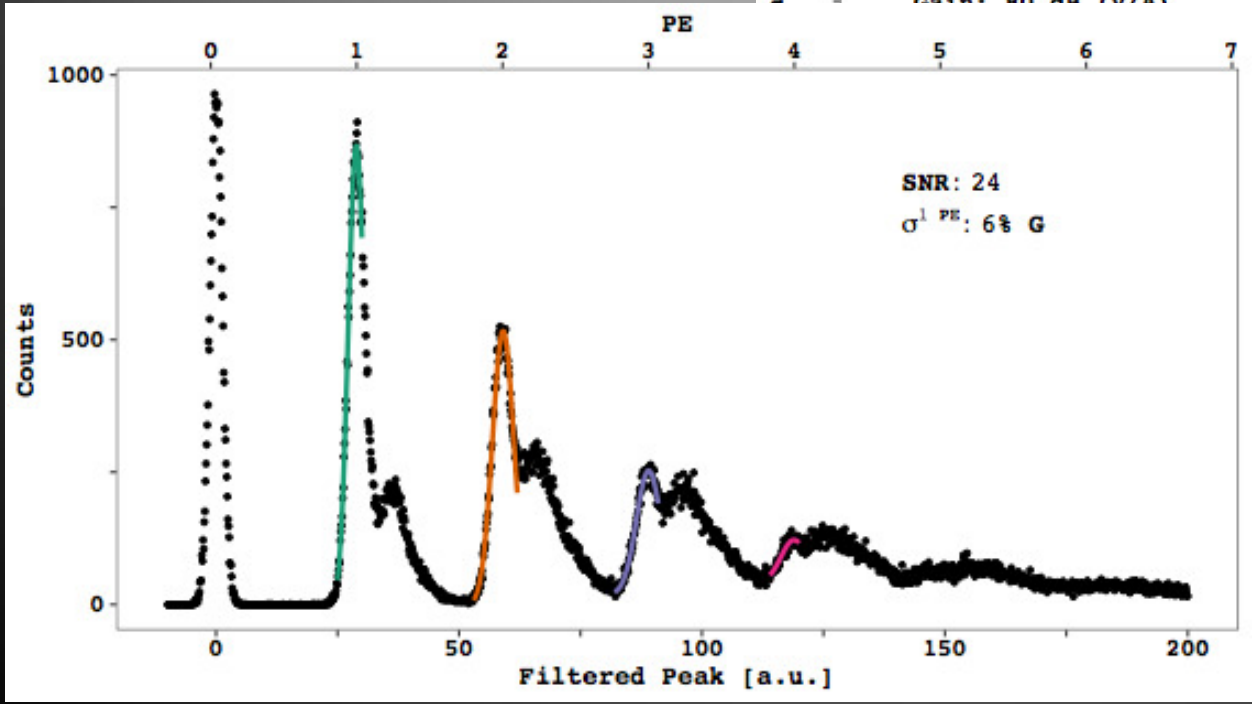

24 cm² @ 77 K

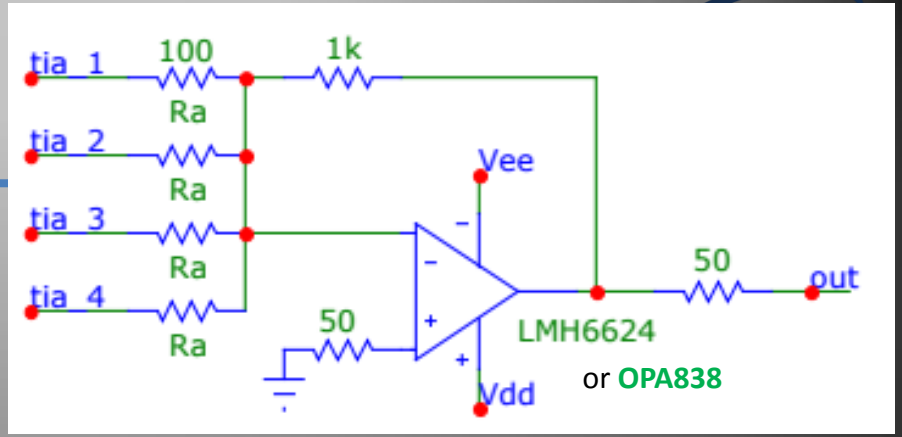

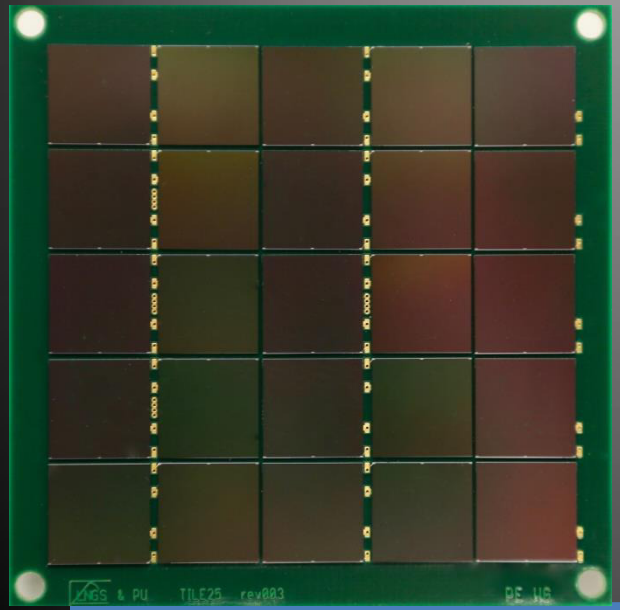

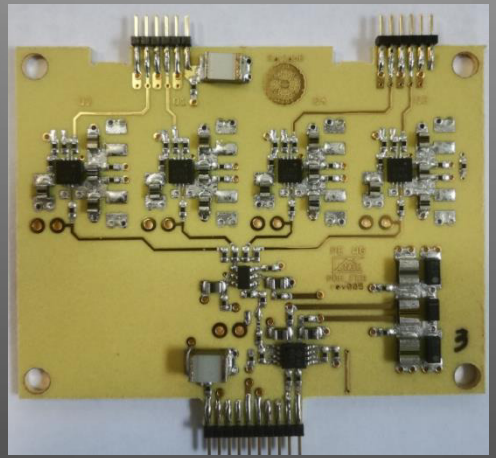

4 x 6 cm² quadrants are aggregated by an active cryogenic adder

Low AP NUV

Extended Gain SiPM for Cryogenic Application from FBK

24 cm^2 @ 77 K 8 VoV

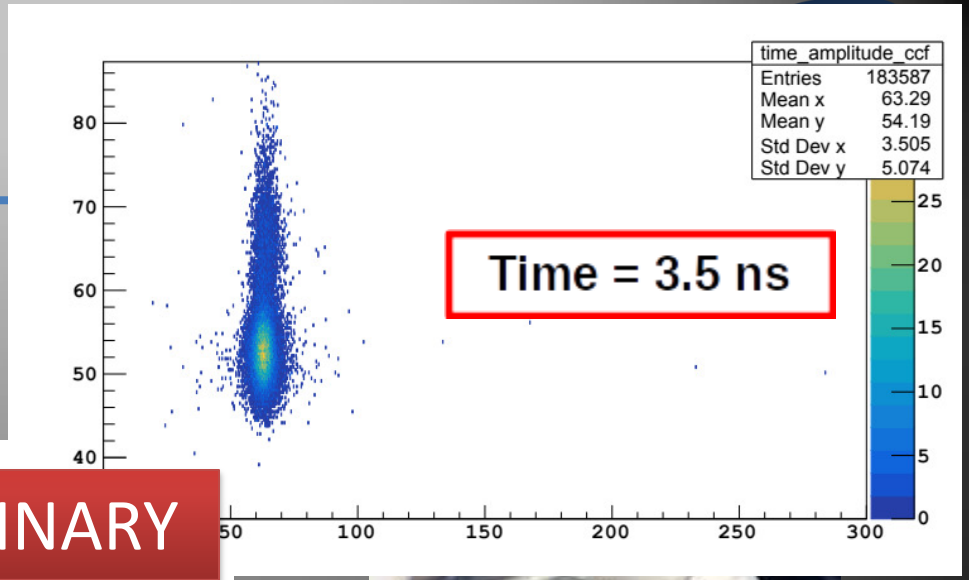

PRELIMINARY

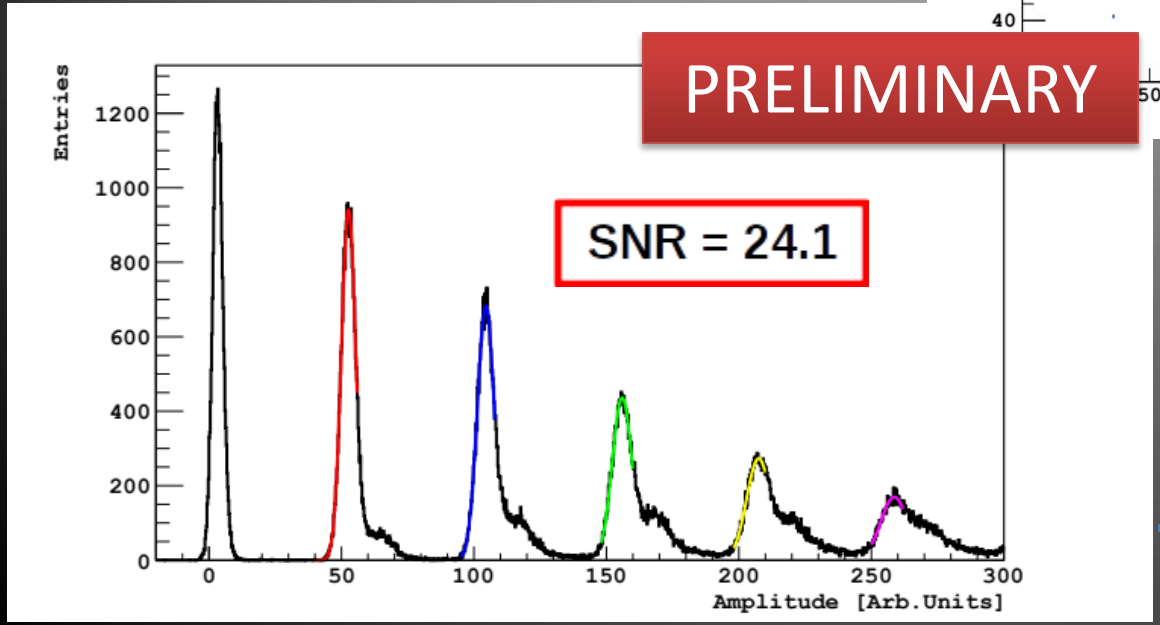

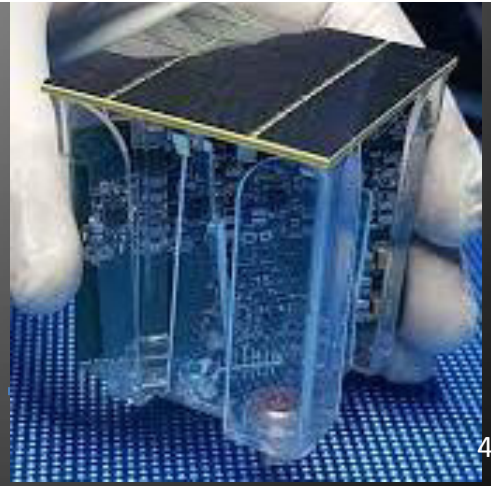

Conclusions

- Silicon detectors is an exciting field in evolution
  - Many options are open: Xrays, particle detectors, light detectors
  - Each application requires a custom readout strategy

- SiPM development in continuous evolution:
  - Better SiPM
  - Integrated digital SiPM with µm pitch (Philips DPC, 3DSiPM from NEXO for cryo-compatible readout)
  - Integrated electronics for large matrix readout in development (INFN Torino for cryo-compatible readout)
  - Aggregated analog readout for large SiPM surfaces

- Large SiPM arrays O(25 cm^2) can be read with outstanding SNR and timing performances
  - SNR >> 10 & timing down to few ns
  - The main contribution to the noise is from the thermal noise of the quenching resistors itself (noise limit)

Thank you

The role of R_s

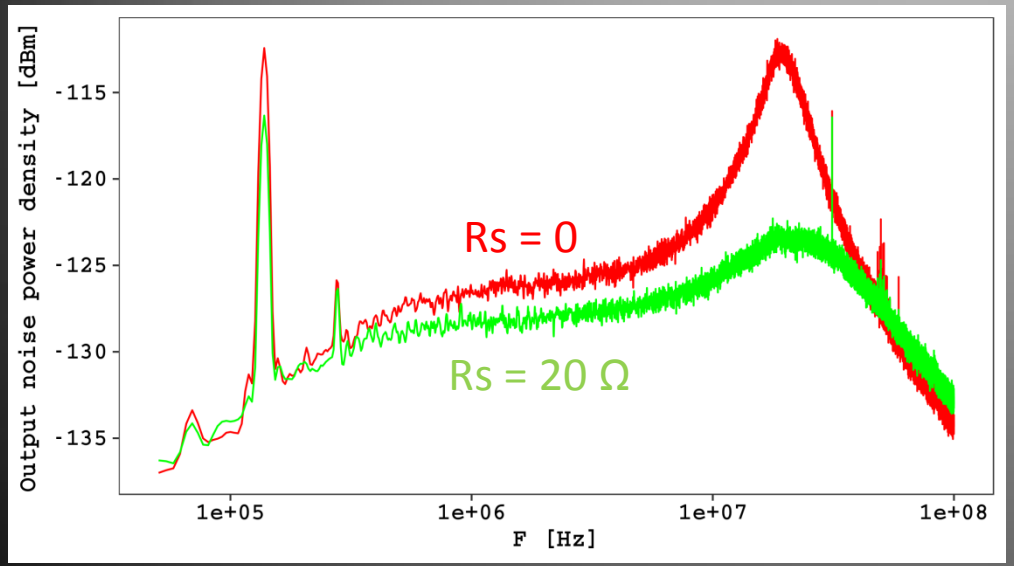

For frequencies > F_T the previous model is broken

The presence of Rs limits the noise gain up to the natural bandwidth of the amplifier

The result is an increased SNR

Zero-Pole cancellation

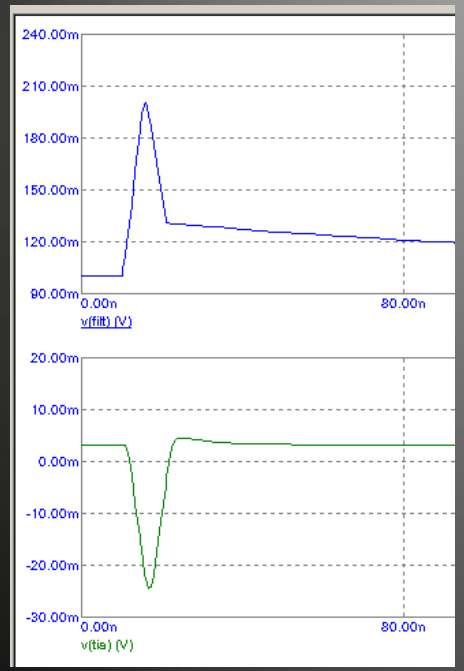

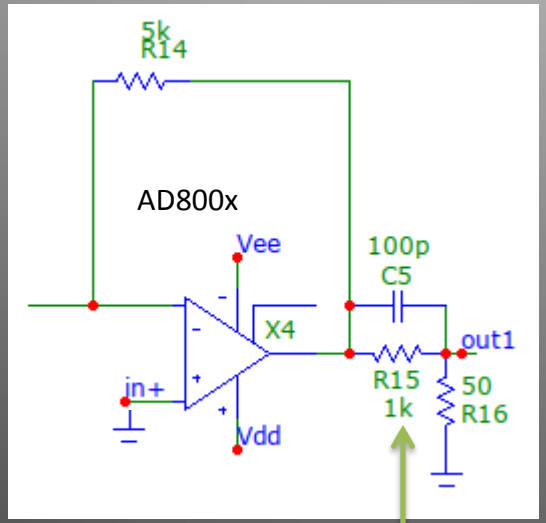

For some application it is better to remove the recharge tail

This can be achieved with zero-pole cancellation

This solution does not avoid saturation of the front-end

ZPC Results

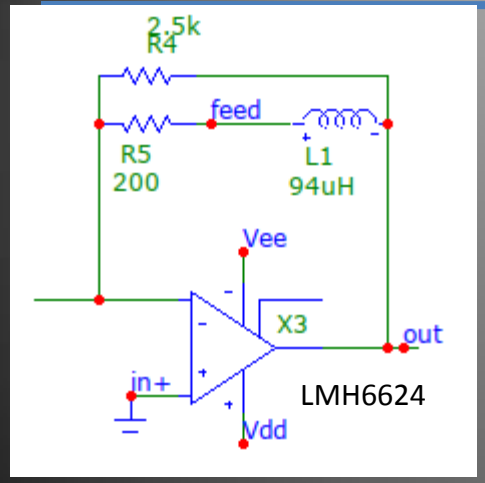

5x5 mm^2 NUV-HD
@ 300 K

The resolution is affected by the DCR

Inductors can not be used in cryogenic

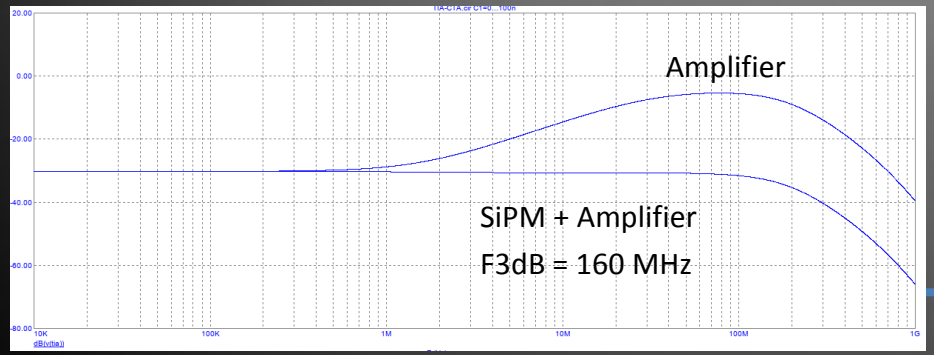

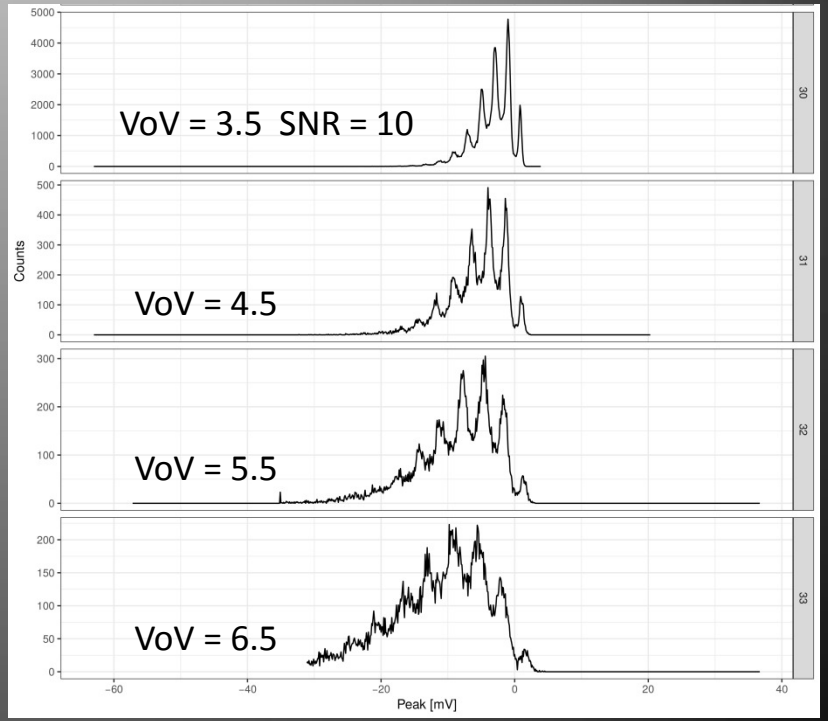

6 cm² SiPM readout

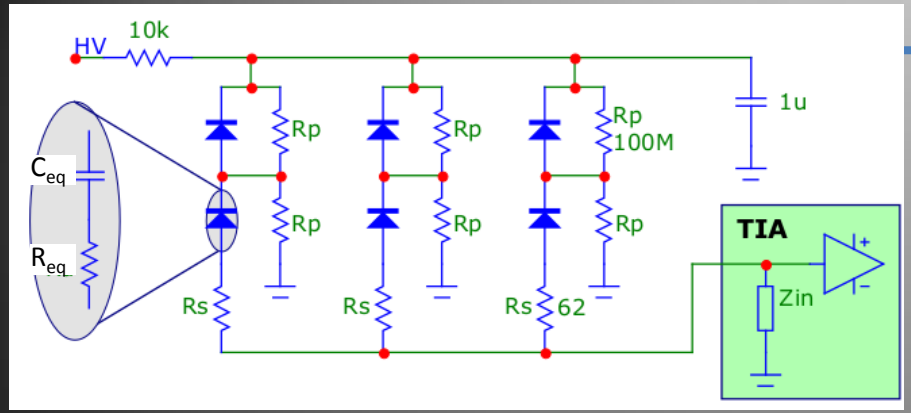

6 x 1 cm² independent readout
(with analog sum)

$$S/N \propto \frac{G}{\sqrt{6}\sqrt{4K_BT(R_{eq} + \cancel{R_s} + R_n)}}$$

6/√6 ~ 2 times better

6 cm² @ 77 K:
R_n = 20 Ω
R_s = 60 Ω
R_{eq} = 60 Ω
R_f = 10 k Ω
n_o = -127 dBm

$$S_I^{max} = \frac{G}{2\tau} \propto \frac{G}{2\,(2R_{eq} + R_s)} \simeq \frac{G}{6R_s}$$

$$n_I = \frac{\sqrt{4K_BT((2R_{eq} + R_s)/3 + R_n)}}{(2R_{eq} + R_s)/3} \simeq \frac{\sqrt{4K_BT(R_{eq} + R_n)}}{R_{eq}}$$

$$S/N \propto \frac{G}{2 \times 3\sqrt{4K_BT((2R_{eq} + R_s)/3 + R_n)}} \simeq \frac{G}{6\sqrt{4K_BT(R_{eq} + R_n)}}$$

6 cm² SiPM readout

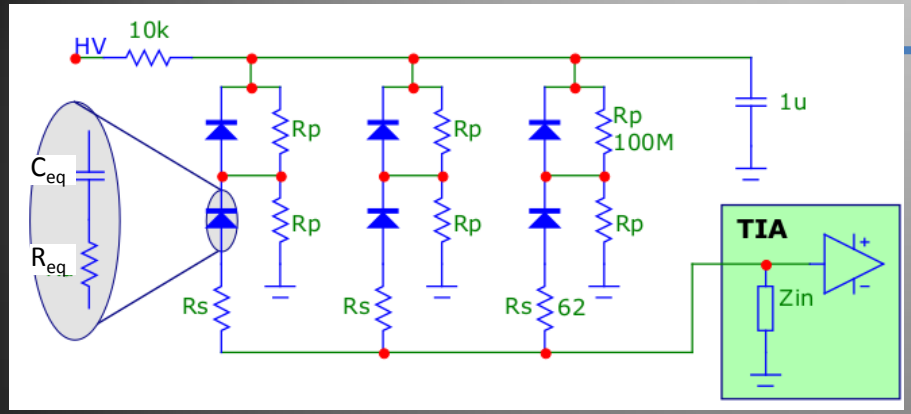

6 x 1 cm² independent readout
(with analog sum)

$$S/N \propto \frac{G}{\sqrt{6}\sqrt{4K_BT(R_{eq} + \cancel{R_s} + R_n)}}$$

6/√6 ~ 2 times better

6 cm² @ 77 K:
R_n = 20 Ω
R_s = 60 Ω
R_{eq} = 60 Ω
R_f = 10 k Ω
n_o = -127 dBm

$$S_I^{max} = \frac{G}{2\tau} \propto \frac{G}{2} \quad G$$

$$n_I = \frac{\sqrt{4K_BT(}}{(}$$

$$S/N \propto \frac{}{2 \times 3\sqrt{}}$$

Open space to integration? It depends

For simple TIA with MOS technology
Typical e_n ~ 2 nV/√Hz <-> R_n(MOS) ~ 1 kΩ

For smarter designs work in progress
(see slides from Manuel Rolo)

24 cm² @ 77 K

5 VoV <=> 1.5 10^6

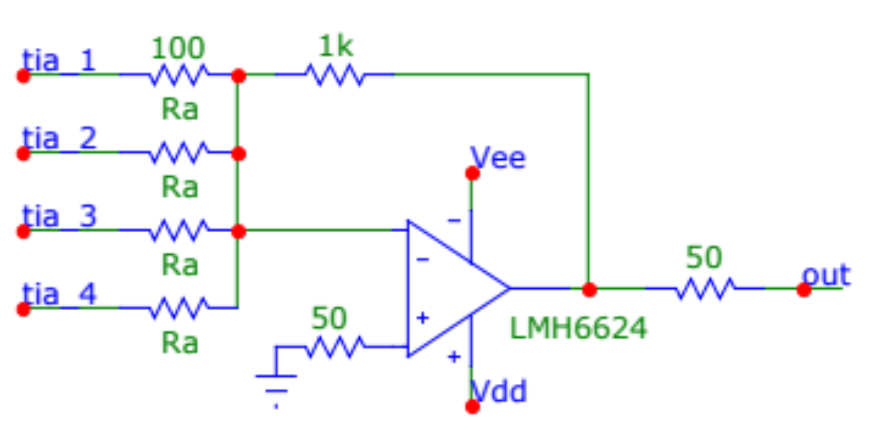

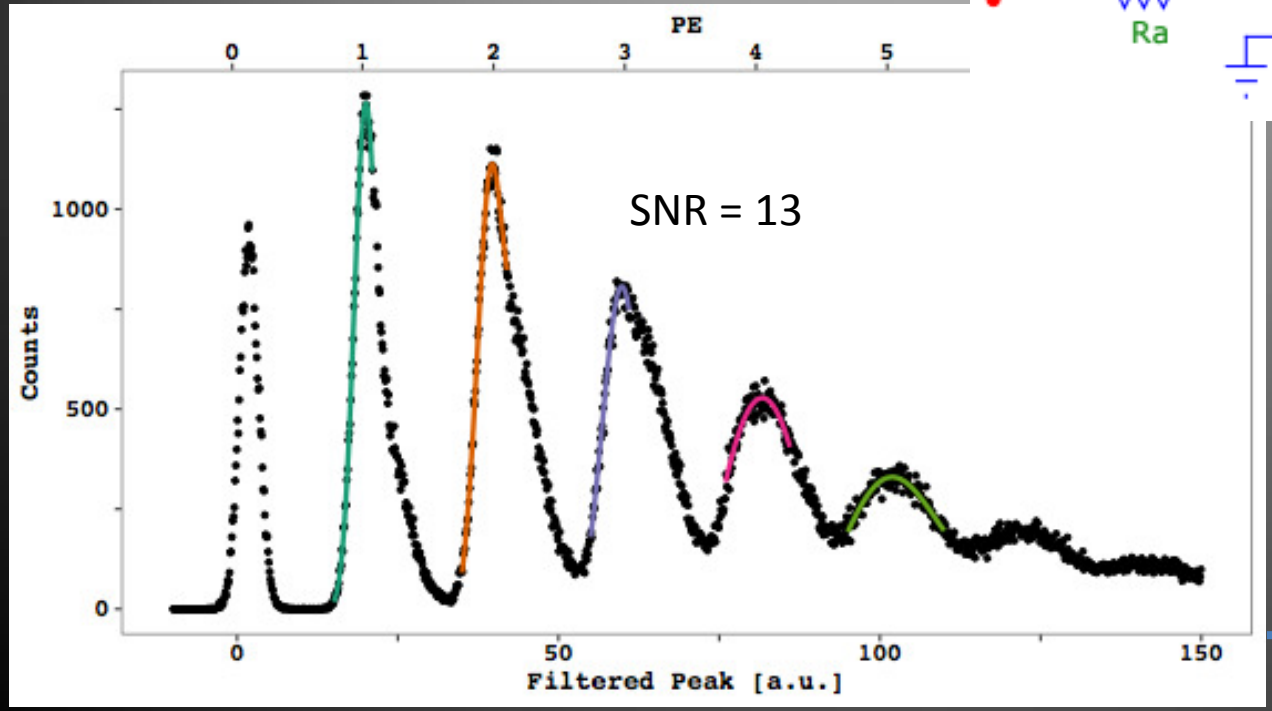

4 x 6 cm² quadrants are aggregated by an active cryogenic adder

24 cm² @ 77 K

5 VoV = 1.5 10^6

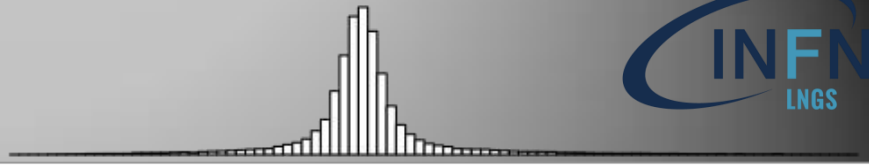

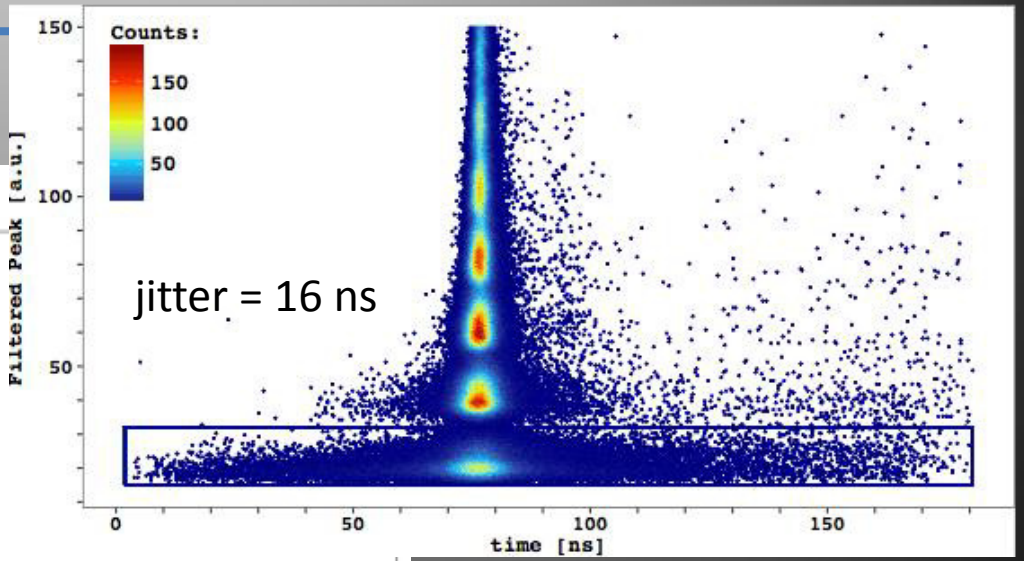

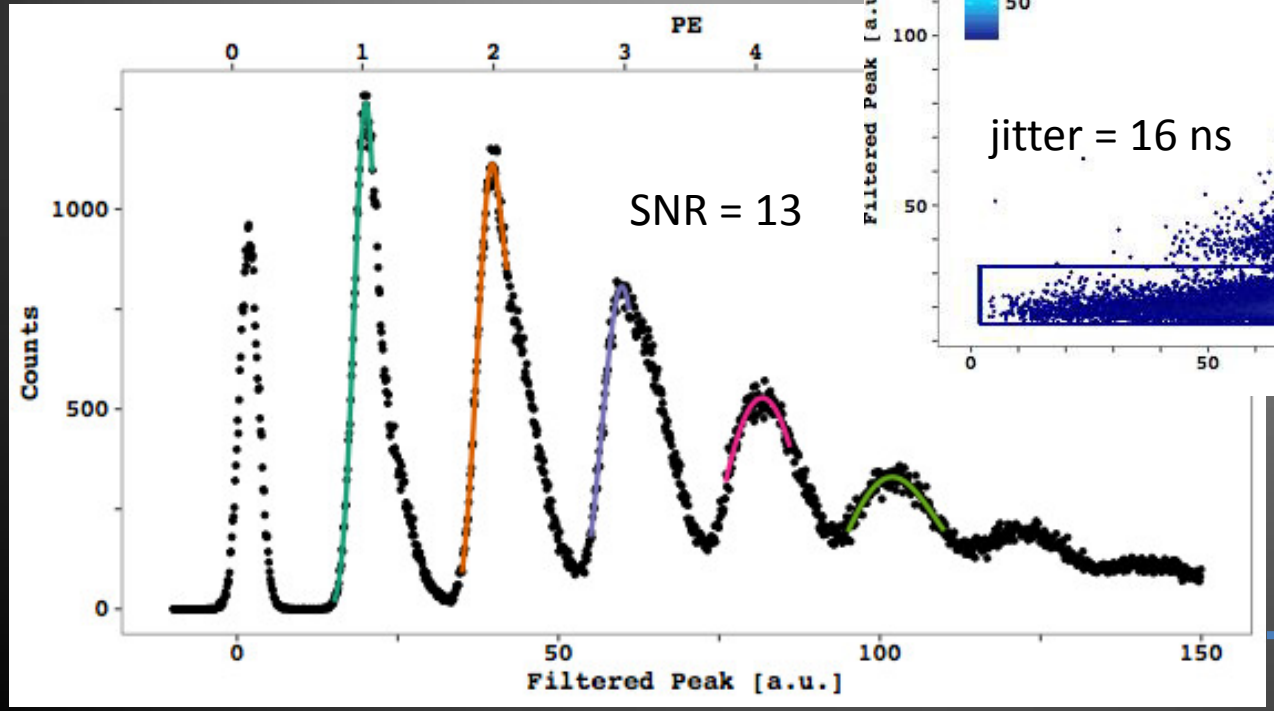

M D'Incecco et al., IEEE TNS 65,1,18

Low AP NUV

Extended Gain SiPM for Cryogenic Application from FBK

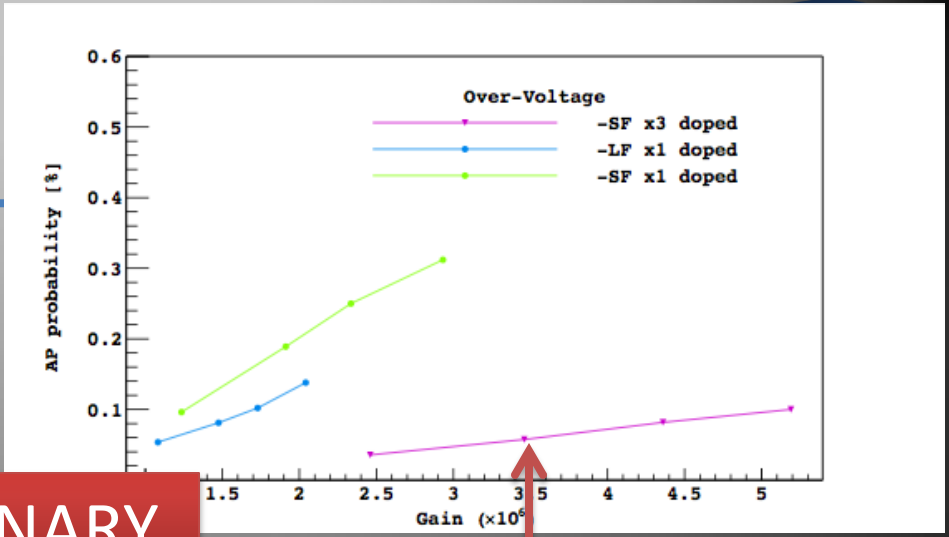

PRELIMINARY

Low afterpulse

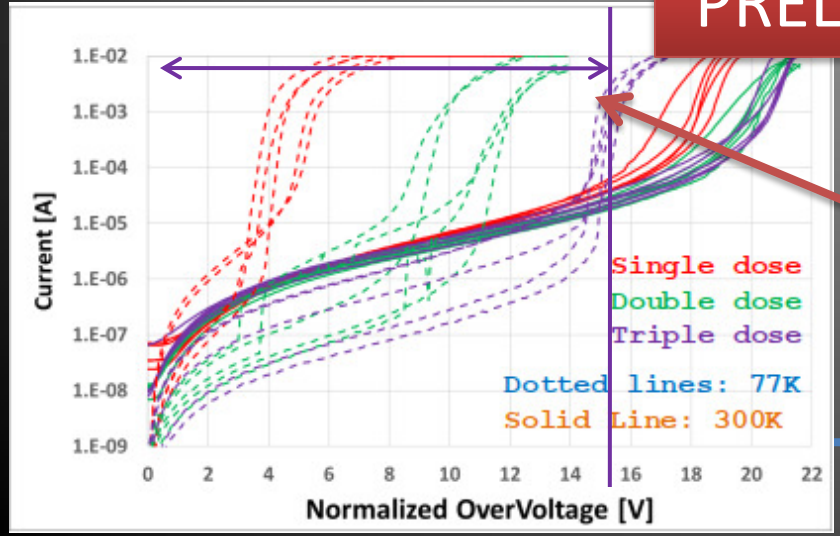

Extended Overvoltage at 77 K > 14 V

Dummy load

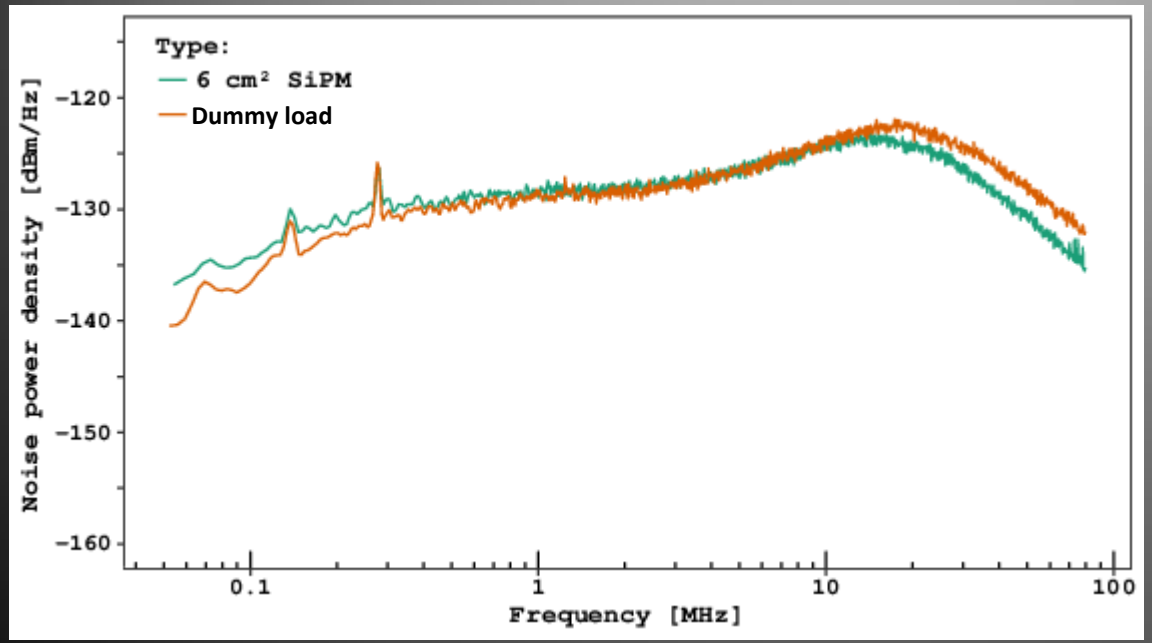

Noise spectrum with 6 cm² versus a dummy load