Searching for light DM with the CRESST experiment

9th Astroparticle Physics Scientific Fair

23 February 2023

Pedro V. Guillaumon
LNGS

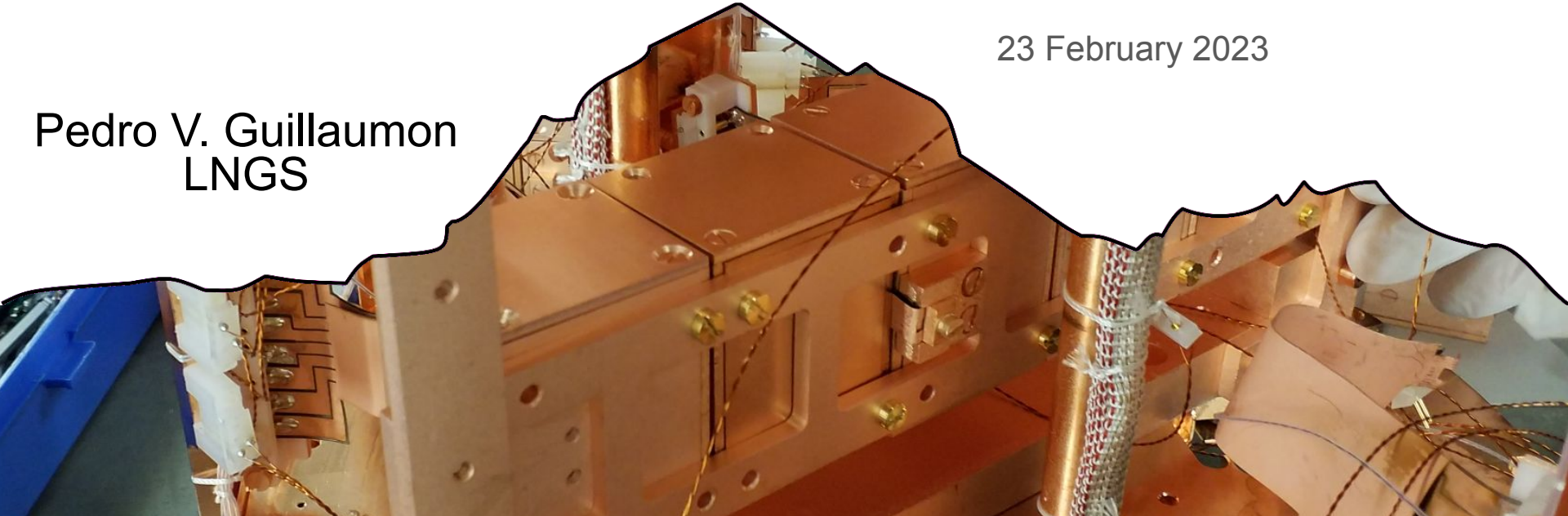

The CRESST experiment

Shields of different materials to protect detectors against different type of radiations

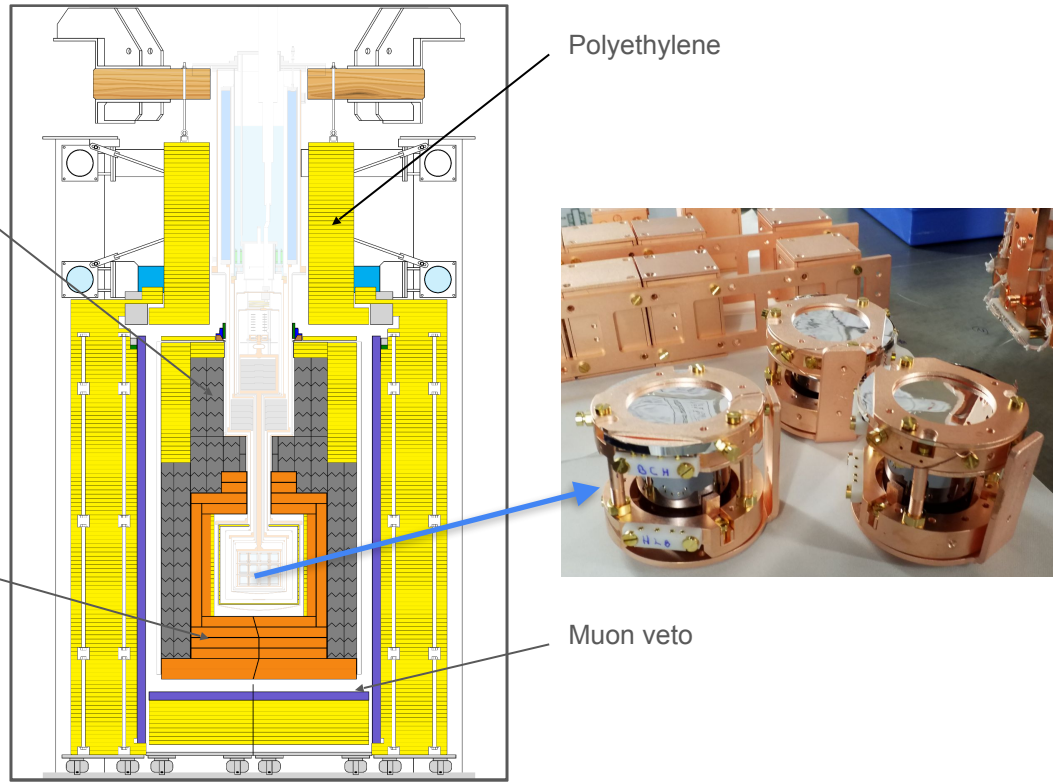

The operating temperature of ~15 mK is reached using a ^{3}He/^{4}He dilution refrigerator

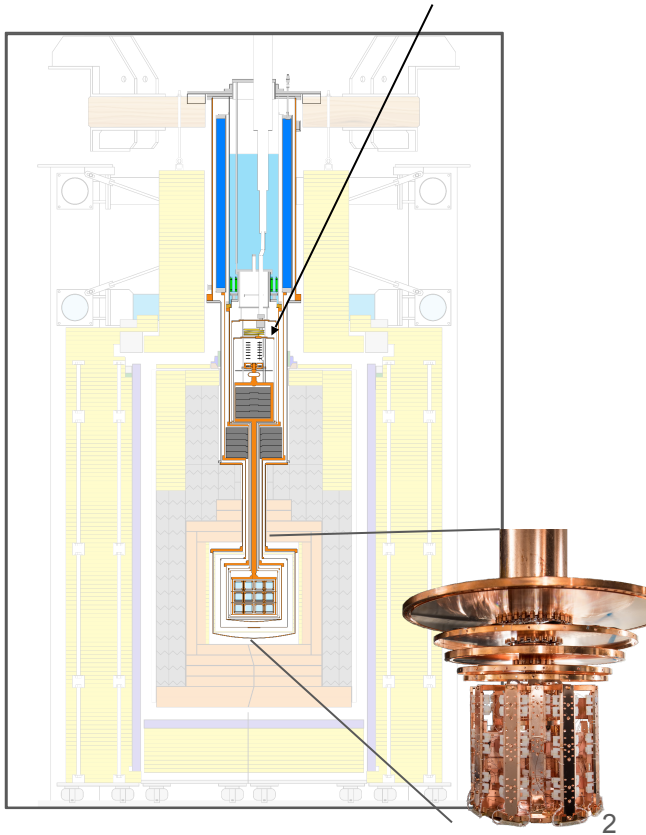

The CRESST detector

OPTIMIZED FOR LOW MASS

DARK MATTER PARTICLE

Phonon detector: ~24gr of $CaWO_4$ scintillating crystal target operated as calorimeter + **TES**

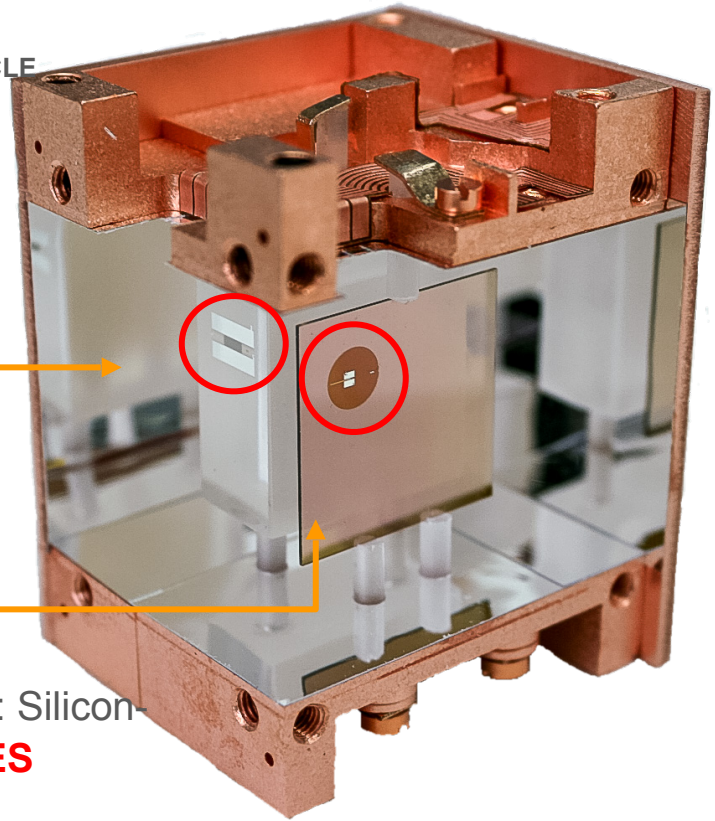

Cryogenic light detector: Silicon-On-Sapphire wafer + **TES**

Transition Edge Sensor allows to be sensitive to extremely small changes in temperature

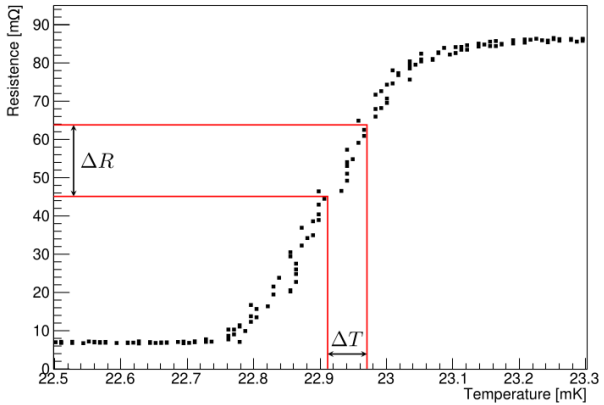

Energy ~keV

⇓

Temperature ~μK

The CRESST detector working principle

Phonons and light are produced by the interaction of the incoming particle with the $CaWO_4$ crystal target.

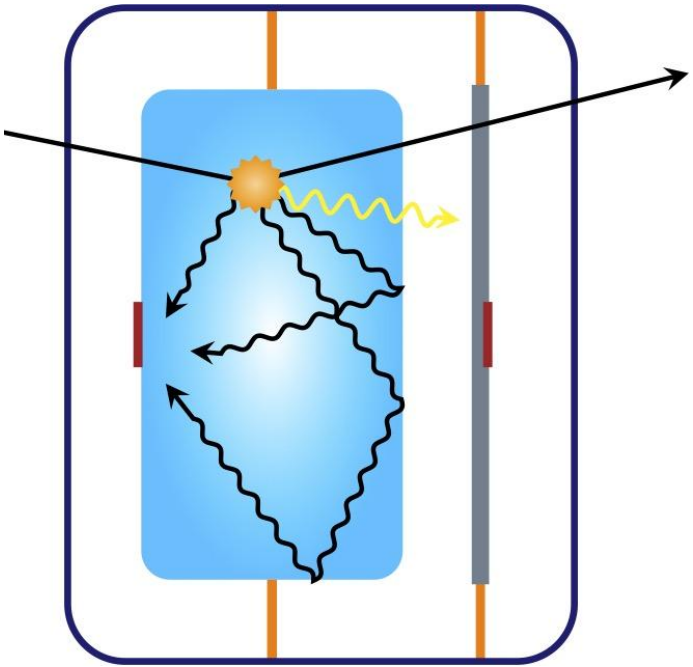

PHONONS

- ≥90% total energy
- Particle independent

⇒ Precise energy measurement

LIGHT

- Few % total energy
- Particle dependent

⇒ Particle discrimination

The CRESST detector event discrimination

Discrimination variable characteristic for each event type:

$$\text{Light Yield} = \frac{\text{Light signal}}{\text{Phonon signal}}$$

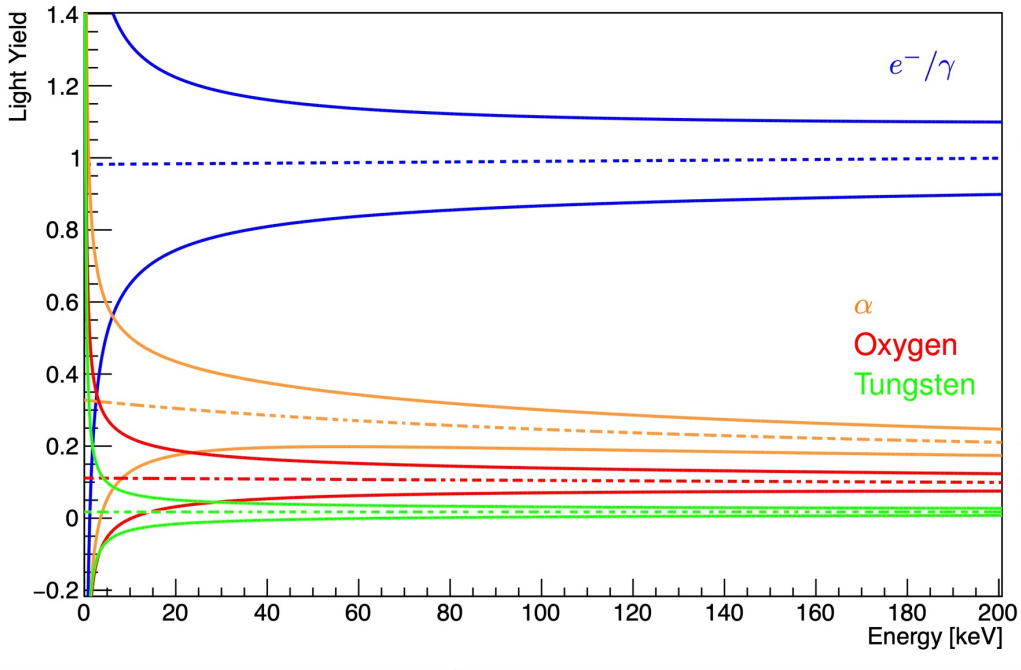

Excellent discrimination between potential signal events (nuclear recoils) and dominant radioactive background (electron recoils)

From the latest CRESST run

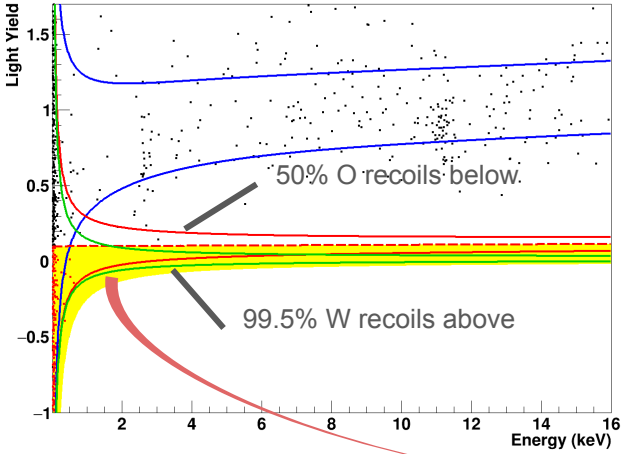

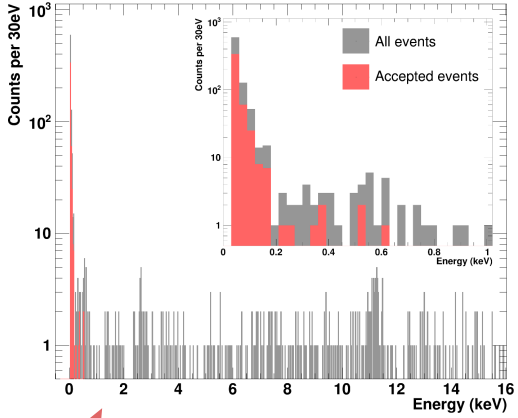

Target crystal mass: 23.6g

Gross exposure (before cuts): 5.689 kg days

Nuclear recoil threshold: 30.1 eV

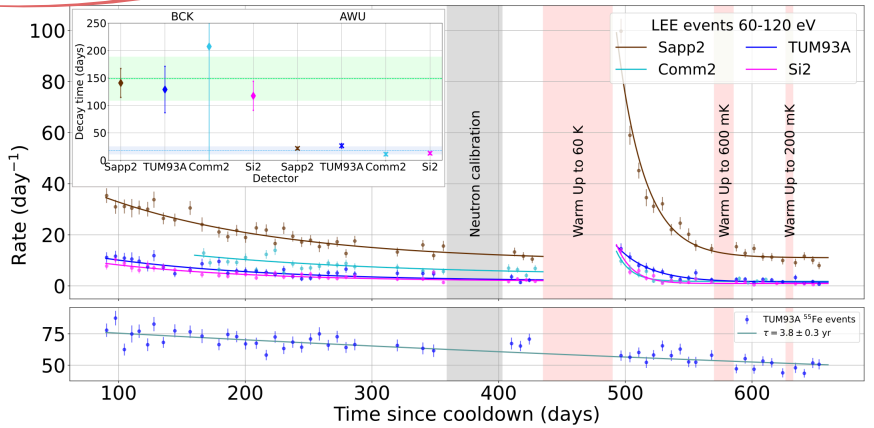

CRESST latest result

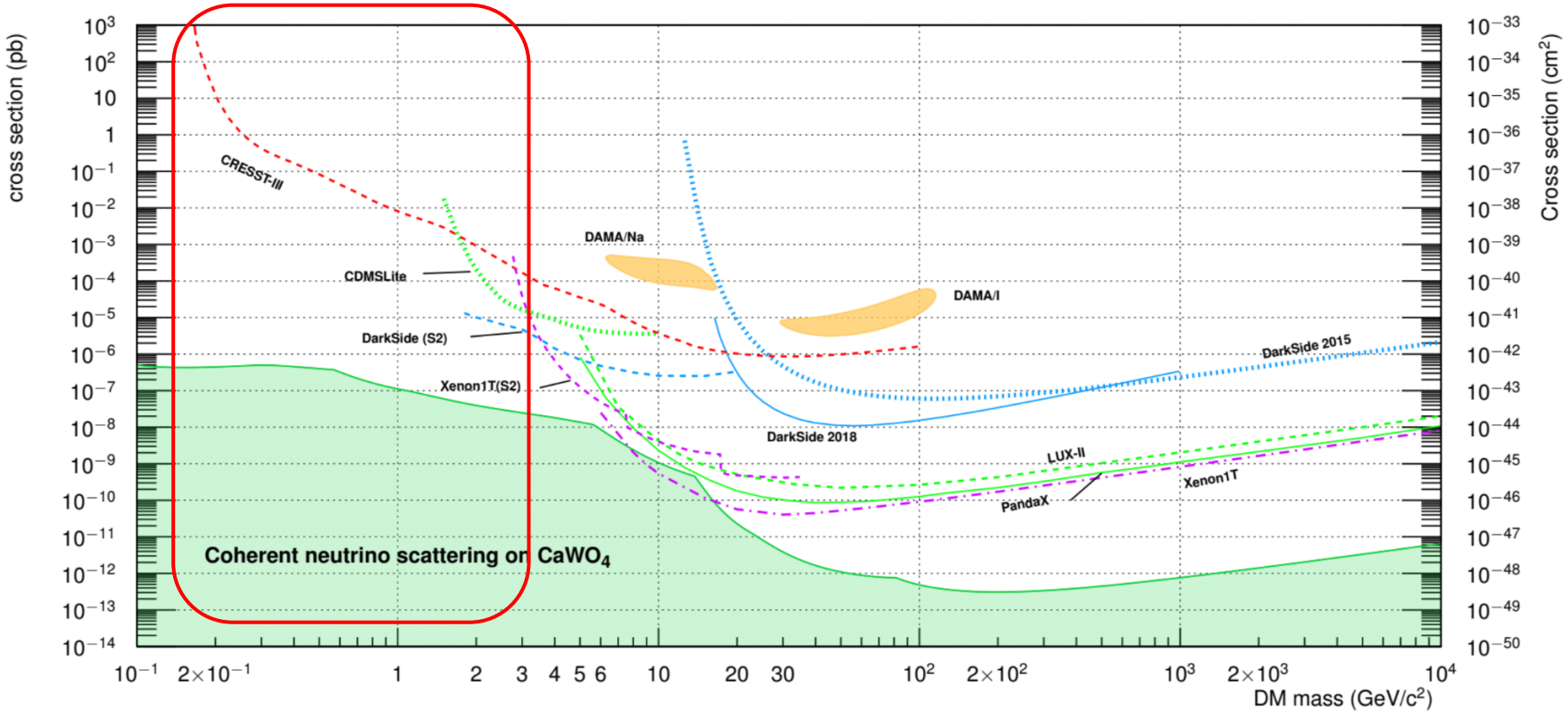

CRESST obtained the best limit below 1GeV

The CRESST collaboration

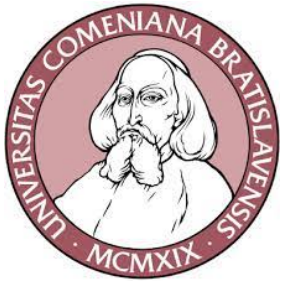

2022 Autumn Collaboration Meeting in Santo Stefano di Sessanio

Opportunities

In the upcoming 3-4 years CRESST will further push the sensitivity in the light DM region, increasing sensitivity and exposure to approach the neutrino floor and possibly observe DM

Hardware:
- Understand the Low Energy Excess
- Development and test of innovative Dark Matter detectors
- Development of a low energy calibration system/source (<2keV)
- Identification of the low energy background <200eV
- Test of optimized CRESST-III modules

Software:
- Dark Matter analysis
- Non-standard Dark Matter channels analysis
- Other rare events analysis

Join us for the physics and the fun! ;)

Paolo Gorla paolo.gorla@lngs.infn.it
Carlo Bucci carlo.bucci@lngs.infn.it
Antonio D'Addabbo (Nello) antonio.daddabbo@lngs.infn.it
Giovanni Benato giovanni.benato@lngs.infn.it

Stefano Di Lorenzo stefano.dilorenzo@lngs.infn.it
Miriam Olmi miriam.olmi@lngs.infn.it
Laura Marini laura.marini@lngs.infn.it
Pedro Guillaumon pedro.guillaumon@lngs.infn.it

Spare slides

Cryogenic bolometer

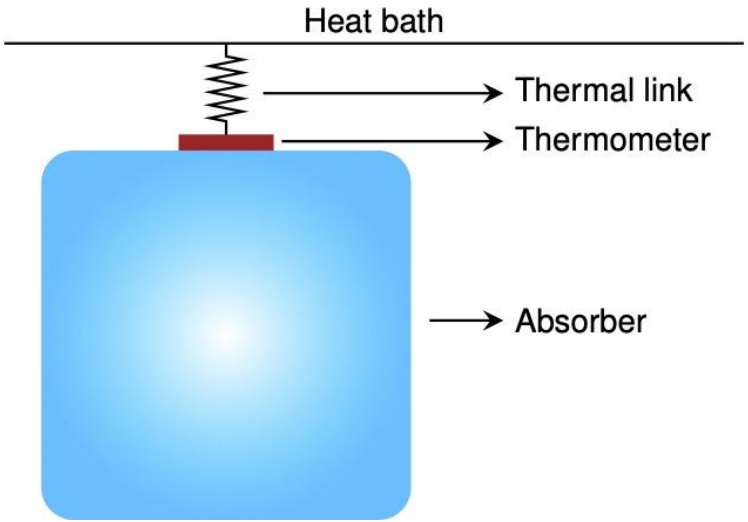

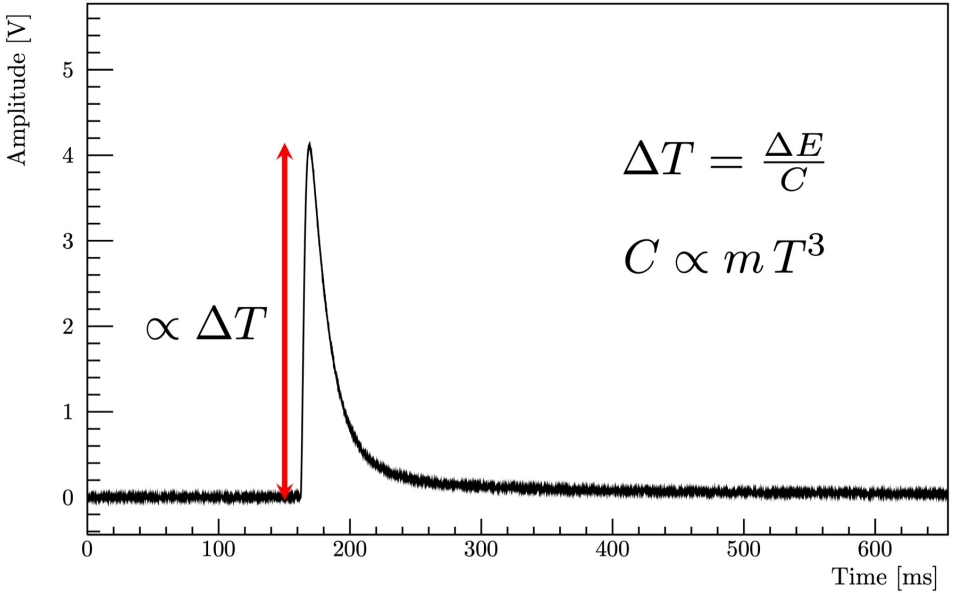

Transition Edge Sensors

TES are equipped with heaters

- Stabilization of detectors in the operating point
- Injection of heat pulses for calibration and d[illegible]tion of trigger threshold

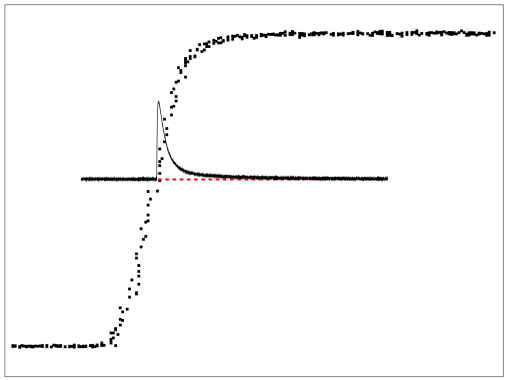

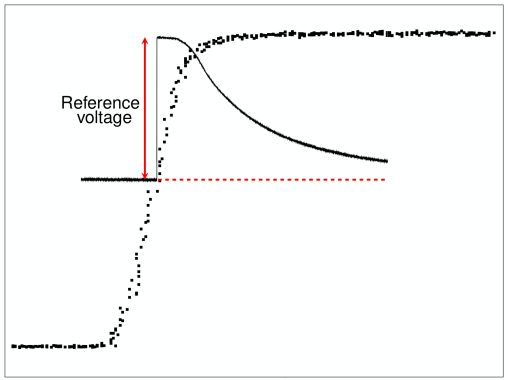

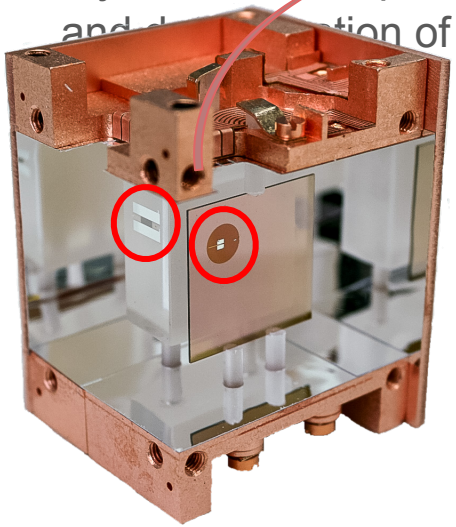

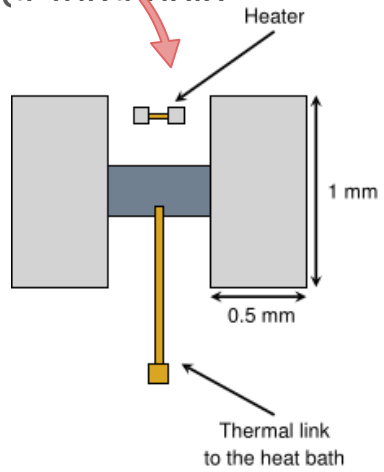

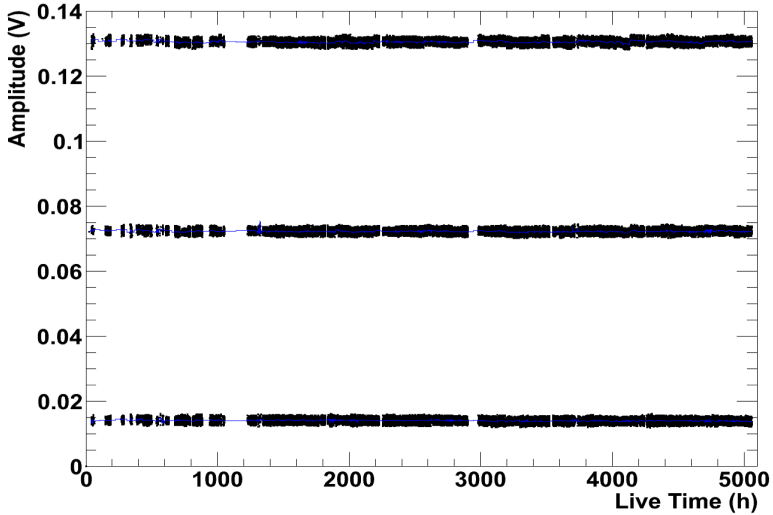

Transition Edge Sensors
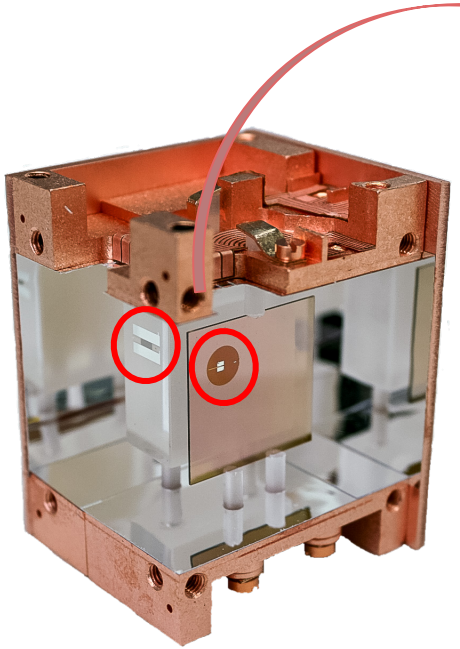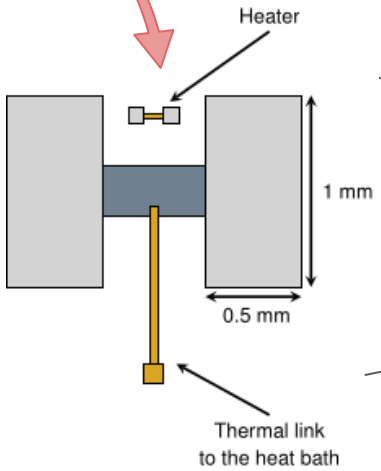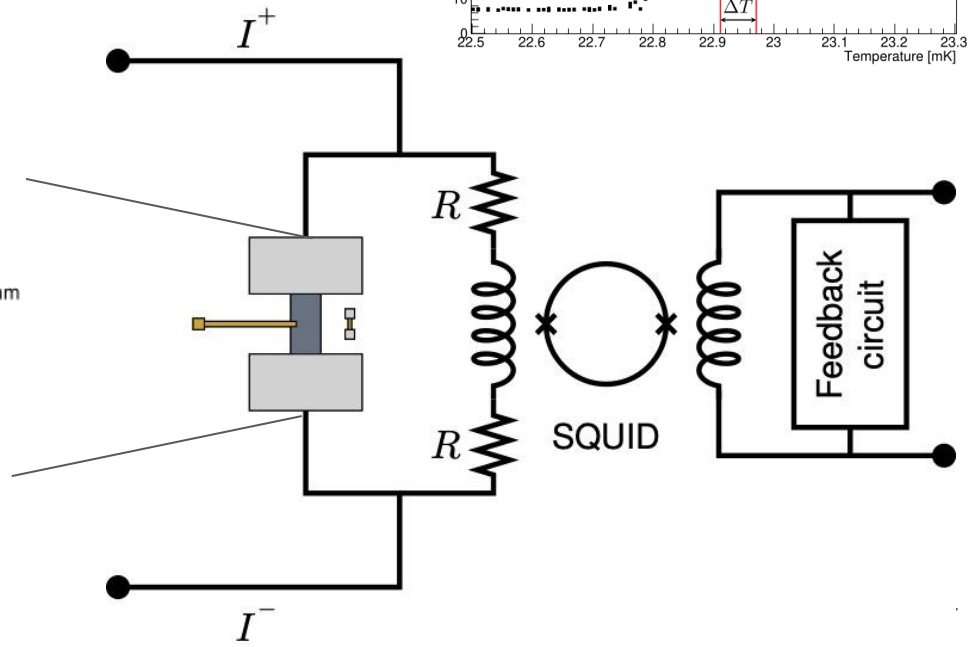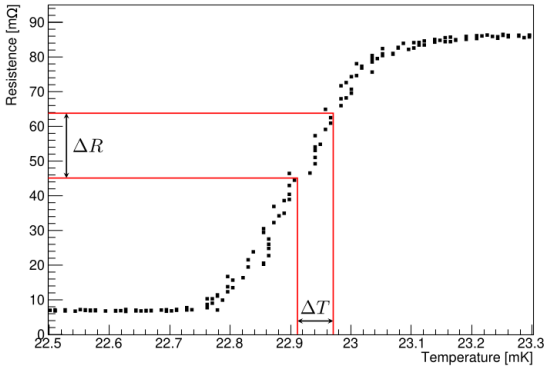
TES resistance is very small and need to be operated with tiny current so the readout is done with SQUID